EPCOS

Product Profile 2006

Power Factor Correction

Power Quality Solutions

just everywhere ...

www.epcos.com

Welcome to the World of Passive Electronic Components

Active everywhere

Passive electronic components are found in every electrical and electronic product – from automotive and industrial electronics through information and communications to consumer electronics. These key components are needed to store electrical energy, select frequencies, and protect against overvoltage and overcurrent. With a portfolio of 40 000 different products and a global presence, we are market leader in Europe and number two worldwide among manufacturers of passive electronic components.

Power Factor Correction

Contents

Preview 4

PFC capacitor series overview 6

Information about PFC capacitors
- Design of capacitors 8
- Important notes 10
- Cautions 11

PFC capacitors
- PhaseCap Premium capacitors (230 … 525 V, 5.0 … 33.0 kvar/premium) 14
- PhaseCap HD capacitors (400 … 525 V, 40.0 … 60.0 kvar/heavy duty) 20
- WindCap capacitors (690 … 800 V, 5.0 … 36.0 kvar/wind turbine) 24
- PhiCap capacitors (230 … 525 V, 0.5 … 30.0 kvar/economical) 28
- MKV capacitors (400 … 690 V, 5.0 … 18.0 kvar/up to +70 °C ambient temperature) 36

PFC controllers
- BR604 and BR6000 series 38

Capacitor contactors 42

Reactors
- Antiresonance harmonic filter: reactors 46
- Discharge reactor 52

Dynamic power factor correction
- Thyristor module TSM-LC 54

Fundamentals of power factor correction 58

Addresses 79

Preview

General

Awareness of the necessity of power quality is increasing, and power factor correction (PFC) will be implemented on a growing scale in future. Enhancing power quality – improvement of power factor – saves costs and ensures a fast return on investment.

In power distribution, in low- and medium-voltage networks, PFC focuses on the power flow (cos φ) and the optimization of voltage stability by generating reactive power – to improve voltage quality and reliability at distribution level.

How reactive power is generated

Every electric load that works with magnetic fields (motors, chokes, transformers, inductive heating, arc-welding generators) produces a varying degree of electrical lag, which is called inductance. This lag of inductive loads maintains the current sense (e.g. positive) for a time even though the negative-going voltage tries to reverse it. This phase shift between current and voltage is maintained, current and voltage having opposite signs. During this time, negative power or energy is produced and fed back into the network. When current and voltage have the same sign again, the same amount of energy is again needed to build up the magnetic fields in inductive loads. This magnetic reversal energy is called reactive power. In AC networks (50/60 Hz) such a process is repeated 50 or 60 times a second. So an obvious solution is to briefly store the magnetic reversal energy in capacitors and relieve the network (supply line) of this reactive energy.

For this reason, automatic reactive power compensation systems (detuned/conventional) are installed for larger loads like industrial machinery. Such systems consist of a group of capacitor units that can be cut in and cut out and which are driven and switched by a power factor controller.

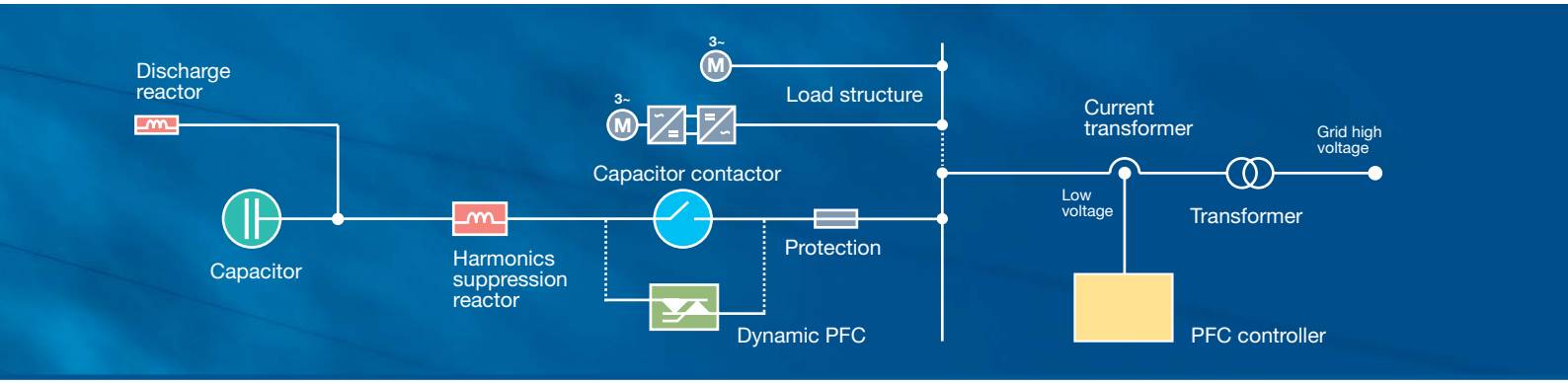

Power factor
Low power factor (cos φ)

Low cos φ results in

- higher energy consumption and costs,
- less power distributed via the network,
- power loss in the network,
- higher transformer losses,
- increased voltage drop in power distribution networks.

Power factor improvement

Power factor improvement can be achieved by

- compensation of reactive power with capacitors,
- active compensation – using semi-conductors,
- overexcited synchronous machine (motor / generator).

Types of PFC (detuned or conventional)

- individual or fixed compensation (each reactive power producer is individually compensated),
- group compensation (reactive power producers connected as a group and compensated as a whole),
- central or automatic compensation (by a PFC system at a central point),
- mixed compensation.

PFC Capacitor Series Overview

General

PFC capacitor series for power factor correction and detuned filter			
Parameter	**Symbol / unit**	**PhaseCap™ Premium**	**PhaseCap™ HD**
Power	Q_R [kvar]	5.0 ... 33.0	40.0 ... 60.0
Rated voltage	V_R [VAC]	230 ... 525	400 ... 525
Inrush current	I_S [A]	up to 200 · I_R	up to 200 · I_R
Temperature class		–25/D max. temp. 55 °C max. mean 24 h = 45 °C max. mean 1 year = 35 °C	–25/D max. temp. 55 °C max. mean 24 h = 45 °C max. mean 1 year = 35 °C
Losses: **– Dielectric** **– Total***	 Q_L [W/kvar] Q_L [W/kvar]	 < 0.2 < 0.45	 < 0.2 < 0.35
Max. humidity	Hrel	95%	95%
Safety	–	triple (self-healing, overpressure disconnector, dry technology)	triple (self-healing, overpressure disconnector, dry technology)
Impregnation	–	inert gas	inert gas, Nitrogen (N_2)
Mean life expectancy	DB(co)	up to 115 000 h	up to 130 000 h
Connection	–	SIGUT™, block-type, safety terminal	SIGUT™, block-type, safety terminal
Cooling	–	natural	natural
Case / shape	–	aluminum / cylindrical	aluminum / cylindrical
Enclosure	IPxx	IP20, optionally IP54	IP20
Standard		IEC 60831-1+2, UL 810 5th edition, cUL file # E238746	IEC 60831-1+2, UL 810 5th edition
Application		PFC and detuned systems	PFC and detuned systems

* Without discharge resistor

PFC Capacitor Series Overview

PFC capacitor series for power factor correction and detuned filter		
WindCap™	**PhiCap**	**MKV**
5.0 ... 36.0	0.5 ... 30.0	5.0 … 18.0
690 ... 800	230 ... 525	400 … 690
up to 300 · I_R	up to 200 · I_R	up to 300 · I_R
–25/D max. temp. 55 °C max. mean 24 h = 45 °C max. mean 1 year = 35 °C	–25/D max. temp. 55 °C max. mean 24 h = 45 °C max. mean 1 year = 35 °C	–25 ... +70 °C max. temp. 70 °C max. mean 24 h = 55 °C max. mean 1 year = 45 °C
< 0.2 < 0.4	< 0.2 < 0.45	< 0.2 < 0.5
95%	95%	95%
triple (self-healing, overpressure disconnector, dry technology)	dual (self-healing, overpressure disconnector)	dual (self-healing, overpressure disconnector)
inert gas, Nitrogen (N_2)	soft resin	oil
up to 130 000 h	up to 100 000 h	up to 150 000 h
SIGUT™, block-type, safety terminal	B32344 series: SIGUT™, block-type, safety terminal B32340 / B32343 series: fast-on terminals	screw terminal
natural	natural	natural
aluminum / cylindrical	aluminum / cylindrical	aluminum / cylindrical
IP20, optionally IP54	IP00, IP20, optionally IP54	IP00
IEC 60831-1+2, UL 810 5th edition, cUL file # E238746	IEC 60831-1+2, UL 810 5th edition cUL file # E106388	IEC 60831-1+2
PFC, detuned systems and wind turbines	PFC and detuned systems	PFC and harmonic filtering

* Without discharge resistor

General

Information about PFC Capacitors

Wavy cut design

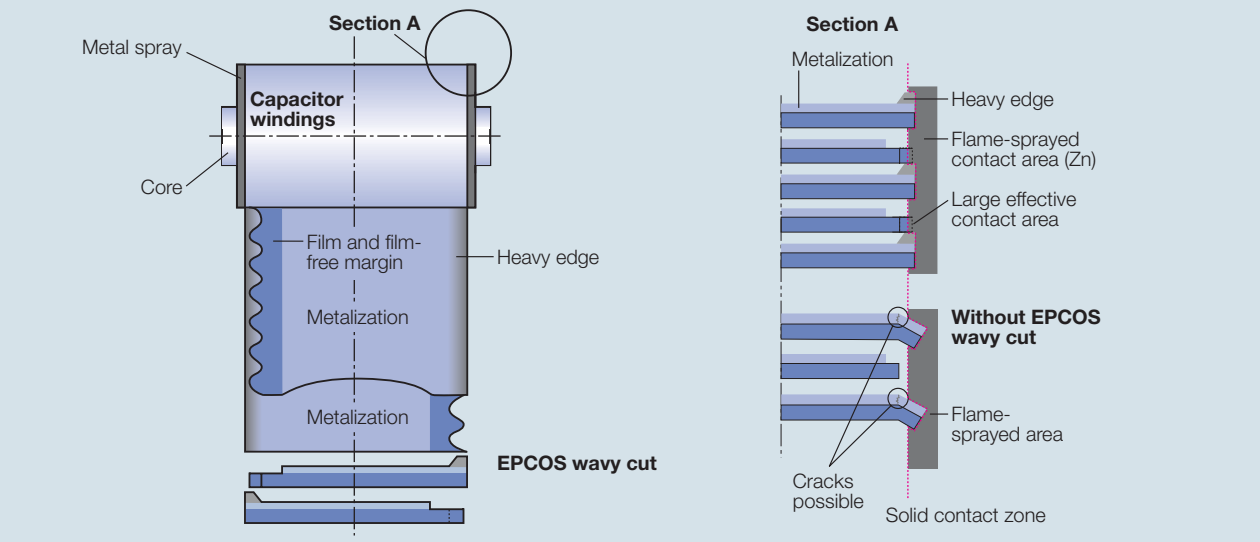

Design of capacitors

MKK/MKP technology

The broad field of application for capacitors combined with physical and economic considerations creates the need for different dielectric technologies.

When it comes to low-voltage power factor correction, MKK/MKP technology (metalized plastic film/polypropylene) has turned out as currently the most suitable and most economic technology. The thickness of the dielectric differs as a function of voltage rating. The metalization (with zinc and aluminum as its major constituents) and edge enhancement with extra junctions or cross-profile metalization play a significant role in achieving high current handling and stable capacitance. Heavy edge and special film cutting technique (optimized combination of wavy and smooth cuts) produces a maximum effective surface for the metal spraying or contacting process (winding design). This results in high surge current withstand capability. The buckling effect on the film edge of the winding – the cause of contact edge problems – is eliminated in this way.

Vacuum impregnation

The active winding elements are heated and then dried for a defined period. Impregnation (e.g. by gas) is performed under vacuum. In this way air and moisture are extracted from the inner capacitor, and oxidation of the electrodes as well as partial discharges are avoided. Afterwards capacitors are hermetically sealed in cases (e.g. aluminum). The elaborate process ensures excellent capacitance stability and long useful life.

Information about PFC Capacitors

Self-healing

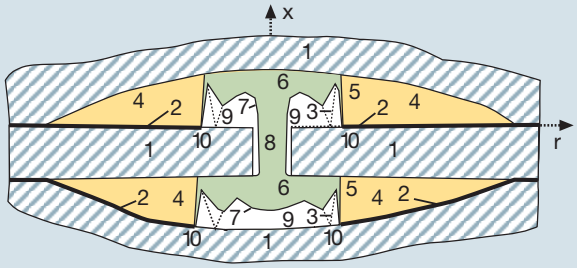

1 Dielectric
2 Metalized electrodes
3 Material displacing shock wave
4 Air gap with metal vapor
5, 6 Plasma zone
7 Boundary layer between gas phase dielectric and plasma
8 Breakdown channel
9 Gas phase dielectric
10 Zone of displaced metalization and dielectric (isolating region)

Overpressure disconnector

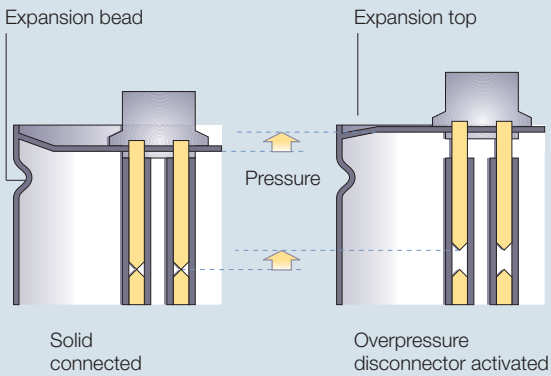

Self-healing

An electric breakdown is possible as the result of thermal or electric overload or at the end of useful life. This results in a small arc that evaporates the metalization in the region of the breakdown in a matter of microseconds. The gas pressure caused at this spot by the high temperature blows the now vaporous metalization out of the breakdown region. This means that a non-conducting isolation region free of metalization is formed here.

During and after the breakdown the capacitor is fully functional. The reduction in capacitance caused by self-healing is less than 100 pF, i.e. of an order that can only be verified by a precision measuring instrument.

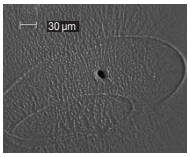

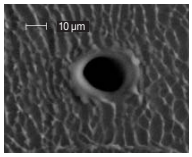

Overpressure disconnector

Electrical components do not have unlimited life expectancy; this applies to self-healing capacitors too. As polypropylene-type capacitors seldom produce a pronounced short circuit, HCR fuses or circuit breakers alone do not offer sufficient protection.

All capacitors featured in this catalog are consequently fitted with a disconnector that responds only to overpressure. If numerous electric breakdowns occur over time or as the result of thermal or electric overload (within IEC 60831 specification), the formation of gas produces a rise in pressure inside the capacitor case. This causes a change in length because of curvature of the lid or stretching of the expansion bead. Expansion beyond a certain degree will separate the internal wires and disconnect the capacitor from the line.

⚠ Caution:
To ensure full functionality of an overpressure disconnector, the following is required:

1. The elastic elements must not be hindered, i.e.
   – connecting lines must be flexible leads (cables),
   – there must be sufficient space for expansion above the connections (stated for the different models),
   – folding beads must not be retained by clamps.
2. Maximum allowed fault current of 10 000 A in accordance with UL 810 standard must not be exceeded.
3. Stress parameters of the capacitor must be within IEC 60831 specification.

General

Please read the *Important notes* on page 10 and *Cautions* on page 11–13.

Important Notes

The following applies to all products named in this publication:

1. Some parts of this publication contain **statements about the suitability of our products for certain areas of application**. These statements are based on our knowledge of typical requirements that are often placed on our products in the areas of application concerned. We nevertheless expressly point out **that such statements cannot be regarded as binding statements about the suitability of our products for a particular customer application**. As a rule, EPCOS is either unfamiliar with individual customer applications or less familiar with them than the customers themselves. For these reasons, it is always ultimately incumbent on the customer to check and decide whether an EPCOS product with the properties described in the product specification is suitable for use in a particular customer application.
2. We also point out that **in individual cases, a malfunction of passive electronic components or failure before the end of their usual service life cannot be completely ruled out in the current state of the art, even if they are operated as specified**. In customer applications requiring a very high level of operational safety and especially in customer applications in which the malfunction or failure of a passive electronic component could endanger human life or health (e.g. in accident prevention or life-saving systems), it must therefore be ensured by means of suitable design of the customer application or other action taken by the customer (e.g. installation of protective circuitry or redundancy) that no injury or damage is sustained by third parties in the event of malfunction or failure of a passive electronic component.
3. **The warnings, cautions and product-specific notes must be observed**.
4. In order to satisfy certain technical requirements, **some of the products described in this publication may contain substances subject to restrictions in certain jurisdictions (e.g. because they are classed as "hazardous")**. Useful information on this will be found in our Material Data Sheets on the Internet (www.epcos.com/material). Should you have any more detailed questions, please contact our sales offices.
5. We constantly strive to improve our products. Consequently, **the products described in this publication may change from time to time**. The same is true of the corresponding product specifications. Please check therefore to what extent product descriptions and specifications contained in this publication are still applicable before or when you place an order.

   We also **reserve the right to discontinue production and delivery of products**. Consequently, we cannot guarantee that all products named in this publication will always be available.
6. Unless otherwise agreed in individual contracts, **all orders are subject to the current version of the "General Terms of Delivery for Products and Services in the Electrical Industry" published by the German Electrical and Electronics Industry Association (ZVEI)**.
7. The trade names EPCOS, EPCOS-JONES, Baoke, CeraDiode, CSSP, MLSC, PhaseCap, PhaseMod, SIFI, SIKOREL, SilverCap, SIMID, SIOV, SIP5D, SIP5K, UltraCap, WindCap are **trademarks registered or pending** in Europe and in other countries. Further information will be found on the Internet at www.epcos.com/trademarks.

Cautions

Temperature class of capacitors (according IEC 60831-1)			
Temperature class	**Temperature of capacitor surrounding air**		
	Maximum	**Maximum mean for 24 h**	**Maximum mean for 1 year**
B	45 °C	35 °C	25 °C
C	50 °C	40 °C	30 °C
D	55 °C	45 °C	35 °C

Enclosure of capacitors (IPxx)		
Enclosure	**First digit**	**Second digit**
IP00	No protection against finger touch and ingress of solid foreign bodies	No protection against ingress of water
IP20	Protection against finger touch and solid foreign bodies ≥ 12.5 mm diameter	No protection against ingress of water
IP41	Protection against tool touch and solid foreign bodies ≥ 1 mm diameter	Drip-water protection
IP54	Protection against tool touch and solid foreign bodies ≥ 1 mm diameter, protection against dust deposit	Splash water protection

Maximum admissible overvoltage			
Frequency (50 / 60 Hz)	**Max. voltage (V_{rms})**	**Max. duration**	**Remarks**
Line frequency	$1.00 \cdot V_R$	Continuous duty	Highest mean during entire operating time of capacitor; exceptions (see below) are admissible for times of < 24 h
Line frequency	$1.10 \cdot V_R$	8 h daily	Line voltage fluctuations
Line frequency	$1.15 \cdot V_R$	30 min daily	Line voltage fluctuations
Line frequency	$1.20 \cdot V_R$	5 min daily	Line voltage fluctuations
Line frequency	$1.30 \cdot V_R$	1 min daily	Line voltage fluctuations
Line frequency with harmonics	Such that current does not exceed maximum admissible figure ($I_{max.} = 1.3 \cdot I_R$)		

Temperature class of capacitors to standard IEC 60831-1

Capacitors are divided into temperature classes. Each class is represented by a number followed by a letter, e.g. –25/D. The number is the lowest ambient temperature at which a capacitor may operate. The upper limit temperature is indicated by the letter (see table above).

The useful life of a capacitor depends very much on temperature. Proper cooling of a capacitor must ensure that the maximum temperature is not exceeded, otherwise useful life is degraded. When configuring a circuit, one should make sure that capacitors are not subjected to heat from adjacent components (reactors, bus bars, etc). Forced cooling is preferable for compact designs. And it is highly inadvisable to arrange capacitors directly above reactors. Exceeding specified temperature limits may set in worst case the safety device out of operation.

Enclosure of capacitors (IPxx)

For different models there are different types of enclosure. The type of enclosure is indicated by a designation consisting of the two letters IP followed by two digits.

Current rating / maximum admissible overcurrent

The rated current (I_R) is the current resulting for rated voltage (V_R) and frequency (in Hz), excluding transients. Maximum permitted RMS current for each particular capacitor is specified in the data sheet. Continuously exceeding of the nominal current will lead to increased self-heating of the capacitor and reduce life time. The maximum admissible overcurrent (I_{max}) of $1.3 \cdot I_R$ to IEC 60831 standard is maintained by all capacitors in this catalog. The figures for overcurrent allow for the combined effects of harmonics, overvoltage and capacitance tolerance.

Maximum admissible overvoltage

Capacitors from EPCOS are suitable for operation on overvoltages quoted by IEC 60831 (see table). Overvoltages higher than $1.15 \cdot V_R$ reduce life time of the capacitor and must not occur more than 200 times during life time of capacitor. Overvoltages above $1.3 \cdot V_R$ must not occur at all, appropriate overvoltage protection (e.g. against lightning strikes) must be ensured.

Cautions

Mean life expectancy

The mean life expectancy of power capacitors is mainly governed by the following factors:
– duration of overload,
– ambient temperature and the resulting case temperature,
– maximum rms current and the resulting case temperature,
– voltage height and duration.

The calculated life expectancy of the various series is stated for nominal operating conditions. If components are stressed less than the IEC 60831 factors, longer useful life can be expected, and a correspondingly shorter one or increased failure rate if nominal parameters are exceeded.

Fuse protection

Power capacitors have to be protected against short circuits by fuses or thermal magnetic overcurrent relays. Slow-blow, low-voltage high-breaking-capacity fuses (HRC) are preferable. The fuse rating should be 1.6 to 1.8 times the rated current of the capacitor. Magnetic short circuit relays should be set to between 9 and 12 times rated current to prevent them responding to high inrush currents. Maximum allowed fault current of 10 000 A in accordance with UL 810 standard must be ensured by the application design.

⚠ HRC fuses must not be used for switching. Resulting electric arcing can cause death! It may also cause capacitor failures, and result, worst case, in capacitor bursting and fire.

Switching of capacitors

When a capacitor is switched to an AC system, the result is a resonant circuit damped to a greater or lesser degree. In addition to the rated current, the capacitor accepts a transient current that is a multiple of (up to 200 times) its rated current. Fast switching, low-bounce contactors should be used, and have the switching capacity for capacitive currents stated by the producer. Special capacitor contactors with leading contacts that feature precharging resistors to damp inrush currents are recommended. As per IEC 60831 standard, a maximum of 5 000 switching operations per year is acceptable. Before considering a higher number of switching operations, please contact EPCOS.

Discharging

Capacitors must be discharged to a maximum of 10% of rated voltage before they are switched in again. This prevents an electric impulse discharge in the application, influences the capacitor's useful life in PFC systems, and protects against electric shock. The capacitor must be discharged to 75 V or less within 3 min. There must not be any switch, fuse or any other disconnecting device in the circuit between the power capacitor and the discharging device. EPCOS supplies capacitor discharge resistors to all series, alternatively discharge reactors are available.

⚠ Caution: Discharge and short circuit capacitor before handling!

Capacitors in networks with harmonics

Harmonics are produced in the operation of electric loads with a non-linear voltage / current characteristic (e.g. rectifiers and inverters for drives, welding apparatus and uninterruptible power supplies). Harmonics are sinusoidal voltages and currents with higher frequencies of a multiple of the 50 or 60 Hz line frequency. In low-voltage three-phase systems the 5th and 7th harmonics are especially troublesome. Detuned capacitors should be used for power factor correction in systems subject to harmonics. These represent a series resonant circuit of power capacitor and reactor. The circuit is tuned so that the series resonant frequency is below the lowest harmonics appearing in the system. This produces an inductive response to all frequencies above the series resonant frequency, avoiding resonances with system inductances. Depending on the selected series resonant frequency, part of the harmonic current is taken up by the detuned power capacitors. The remainder of the harmonic current flows into the superordinate system. The use of detuned power capacitors thus contributes to reducing voltage distortion through harmonics and lessens the disturbing effect on proper operation of other electric loads.

Most international standards limit THD-V on LV side to 5%. However it has to be noted that in many grids these levels are exceeded and even lower distortion, e.g. 3–4% THD-V can generate extreme overcurrents in case of resonance condition.

Maximum overcurrents as specified under technical data of each series must not be exceeded.

Resonance must be avoided by appropriate panel design. Resonance may cause very high overcurrents which can lead to capacitor failures, and worst case, to explosion and fire.

Cautions

Mechanical damage

In case of dents or any other mechanical damage, capacitors must not be used at all.

Vibration resistance

The resistance to vibration of capacitors corresponds to IEC 68, part 2–6.

Max. test conditions:

Test duration	2 h	
Frequency range	10 ... 55 Hz	corresponding to max. 0.7 g
Displacement amplitude	0.75 mm	

Because the fixing and the terminals may influence the vibration properties, it is necessary to check stability when a capacitor is built in and exposed to vibration. Irrespective of this, you are advised not to locate capacitors where vibration amplitude reaches the maximum in strongly vibrating equipment.

Connection

Make sure connection cables are of flexible type or flexible copper bands are used. This is mandatory to allow the overpressure disconnector work and avoid mechanical stress on the terminals and feedthroughs.

The connection cables to the capacitor should be designed for a current of at least 1.5 times the rated current so that no heat is conducted into the capacitor. If reactors are used in an application, the distance between reactor and capacitor must be great enough so that no heat of the reactors, which are operating at a much higher temperature level, is conducted via connection cable to the capacitors.

Avoid bending cable lugs, cables or other mechanical force on the terminals. Otherwise leakages may set the safety device out of operation.

Ensure firm fixing of terminals, fixing torque to be applied as per individual specification.

Maximum specified terminal current (please refer to technical data of specific series) must not be exceeded at any case.

Grounding

The threaded bottom stud of the capacitor has to be used for grounding. In case grounding is done via metal chassis that the capacitor is mounted to, the layer of varnish beneath the washer and nut should be removed.

Storage and operating conditions

Do not use or store capacitors in corrosive atmosphere, especially where chloride gas, sulfide gas, acid, alkali, salt or the like are present. In dusty environments regular maintenance and cleaning especially of the terminals is required to avoid conductive path between phases and / or phases and ground.

Installation

Specifications like IEC 61921, VDE 0100, VDE 0101, VDE 0560 part 4 and 46, EN 60831 and IEC 60831 apply to the installation and operation of power capacitors. Capacitors should be sited in cool and well ventilated locations away from other heat-radiating elements. Natural heat dissipation is generally sufficient for cooling purposes if enough air is able to flow to and away from them and the capacitors are spaced at least 20 mm apart. Otherwise, in a less well ventilated environment, forced cooling (fans) will be necessary, scaled so that the maximum admissible ambient temperature is not exceeded.

Useful life of capacitors strongly depends on the operating temperature (refer to page 11, temperature classes of capacitors).

Exceeding maximum allowed temperature may set the safety device out of operation.

Please read chapter *Installation and Maintenance* on page 63.

Note

Products shown in this catalog reflect typical specifications. You are kindly requested to approve our product specifications or request our approval for your specification before ordering.

PhaseCap Premium PFC Capacitors

Gas-impregnated ■ Dry type ■ Concentric winding ■ Wavy cut ■ Triple safety system

PhaseCap

General

PhaseCap capacitors in cylindrical aluminum cases have been designed for power factor correction in low-voltage plant. Loads like motors and transformers consume active power as well as reactive power. Generators, supply cables and other electrical distribution equipment, in turn, should be relieved of reactive power. The MKK (metalized plastic compact) AC series (> 5.0 to 33.0 kvar) is intended to increase packing density per bank and cut component costs. Improved thermal response and simplified installation are advantages of the cylindrical aluminum case.

Applications

- Automatic PFC equipment, capacitor banks
- Individual fixed PFC (e.g. motors, transformers, lighting)
- Group fixed PFC
- Tuned and detuned capacitor banks

Features

Electrical

- Long life expectancy
- High pulse current withstand capability (up to 200 · I_R)

Mechanical and maintenance

- Reduced mounting costs
- Maintenance-free

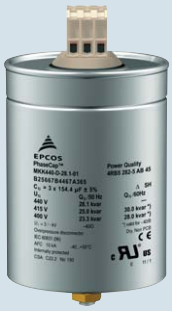

Safety

- Self-healing
- Overpressure disconnector
- Touch-proof terminals
- Longterm approved
- Ceramic discharge module pre-mounted

Environmental

- Dry design, inert gas
- No oil leakage

The compact PhaseCap capacitor is a self-healing, metalized polypropylene film capacitor. The current-carrying metal layer (electrode) is vapor-deposited onto one side of the film.

Compact design – low height, weight and volume

Three electrically separated capacitor elements are wound concentrically in a single operation onto an insulated metal core tube, which guarantees excellent winding precision. The electrodes are connected by metal spraying the face ends of the winding elements.

The compact MKK winding elements are housed in a cylindrical aluminum case and hermetically sealed by a press-rolled metal lid.

Triple safety system

- Dry technology: instead of a liquid impregnating agent, the capacitor is filled with gas. So there is no risk of leaking oil.
- Self-healing: the capacitor repairs itself after overload (to IEC 60831).
- Overpressure disconnector: refer to page 9.

Innovative and reliable SIGUT connection technology

SIGUT terminals ensure reliable and straightforward connection, even in a parallel capacitor circuit, with benefits like:

- protection against electric shock hazard (IP20 to VDE 0106 part 100)
- separate connection of discharge resistors
- clamping device to prevent loosening of screws
- cable cross-sections up to 16 mm²
- max. 50 A total RMS current

Life expectancy of up to 115 000 h

After a long drying phase under vacuum to eliminate moisture from the active element, the capacitor is impregnated. The case is filled with inert gas and sealed. Then routine tests are performed for gas leakage.

This production process helps to avoid oxidation and partial discharges (corona effect), promoting capacitance stability over a long period, an essential in detuned PFC.

High inrush current withstand capability is crucial

Capacitors used for power factor correction undergo a lot of switching operations. The high inrush currents that go along with this must be handled without degrading life expectancy. The pulse strength of this technology comes in particular from the enlarged, sensitive contact area (improved metal spraying). The breakthrough came with a Siemens patent called the wavy cut, plus heavy-edge film design. PhaseCap capacitors can handle inrush currents of up to 200 times rated current (max. 5 000 switching operations p.a. according to IEC 60831 standard).

PhaseCap Premium PFC Capacitors

Gas-impregnated ■ Dry type ■ Concentric winding ■ Wavy cut ■ Triple safety system

Technical data and limit values		
Standards IEC 60831-1+2, EN 60831-1+2, UL 810 5th edition		
Overvoltage	V_{max}	V_R + 10% (up to 8 h daily) / V_R + 15% (up to 30 min daily) / V_R + 20% (up to 5 min daily) / V_R + 30% (up to 1 min daily)
Overcurrent	I_{max}	up to 1.3 · I_R (up to 1.5 · I_R including combined effects of harmonics, overvoltages and capacitance tolerance)
Inrush current	I_S	up to 200 · I_R
Losses: **– Dielectric** **– Total***		 < 0.2 W/kvar < 0.45 W/kvar
Rated frequency	f	50/60 Hz
Capacitance tolerance		–5% / +10%
Test voltage, terminal/terminal	V_{TT}	2.15 · V_{R1}, AC, 10 s
Test voltage, terminal/case	V_{TC}	up to V_R ≤ 660 V: 3000 VAC, 10 s; above V_R = 660 V: 6000 VAC, 10 s
Mean life expectancy	$t_{LD(Co)}$	up to 115000 h
Ambient temperature		–40/D; max. temp. 55 °C; max. mean 24 h = 45 °C; max. mean 1 year = 35 °C; lowest temperature = –40 °C
Cooling		natural or forced
Humidity	H_{rel}	max. 95%
Altitude		max. 4000 m above sea level
Mounting position		random
Mounting and grounding		threaded M12 stud on bottom of case
Safety		dry technology, overpressure disconnector, self-healing, maximum allowed fault current 10000 A in accordance with UL 810 standard
Discharge module		ceramic discharge module premounted, discharge time ≤ 75 V in 60 s; ≤ 75 V in 90 s for types marked with [4)]
Case		extruded aluminum can
Enclosure		IP20, indoor mounting (optionally with terminal cap for IP54)
Dielectric		polypropylene film
Impregnation		inert gas, Nitrogen (N_2)
Terminals		SIGUT terminal strip with electric shock protection (IP20), (VDE 0106 part 100), max. 16 mm² cable cross-section, max. current 50 A
Certification		cUL file # E238746
Number of switching operations		max. 5000 switchings per year according to IEC 60831-1+/2

* Without discharge resistor

PhaseCap Premium PFC Capacitors

Gas-impregnated ■ Dry type ■ Concentric winding ■ Wavy cut ■ Triple safety system

PhaseCap

Three-phase capacitors

Type	50 Hz		60 Hz		C_R	d x h	Weight	Ordering code	Packing unit*
	Output kvar	I_R A	Output kvar	I_R A	µF	mm	kg		
Rated voltage 230 VAC, 50/60 Hz, delta connection									
MKK230-D-5-01	5.0	13	6.0	16	3 · 100	121 x 164	1.3	B25667B3297A375	6
MKK230-D-7.5-01	7.5	19	9.0	23	3 · 150	121 x 164	1.3	B25667B2457A375	6
MKK230-D-10.4-01	10.4	26	12.5	31	3 · 209	121 x 164	1.5	B25667B2627A375	6
MKK230-D-12.5-01[4]	12.5	31	15.0	37	3 · 251	121 x 200	1.7	B25667B2757A375	4
Rated voltage 400 VAC, 50/60 Hz, delta connection									
MKK400-D-5-01	5.0	7	6.0	9	3 · 32	121 x 164	1.1	B25667B5966A375	6
MKK400-D-7.5-01	7.5	11	9.0	13	3 · 50	121 x 164	1.2	B25667B3147A375	6
MKK400-D-10-01	10.0	14	12.0	17	3 · 64	121 x 164	1.2	B25667B4197A375	6
MKK400-D-12.5-01	12.5	18	15.0	22	3 · 83	121 x 164	1.1	B25667B3247A375	6
MKK400-D-15-01	15.0	22	18.0	26	3 · 100	121 x 164	1.3	B25667B3297A375	6
MKK400-D-20-01	20.0	30	24.0	36	3 · 133	121 x 164	1.5	B25667B3397A375	6
MKK400-D-25-01	25.0	36	–	–	3 · 165	121 x 200	1.8	B25667B3497A375	4
Rated voltage 415 VAC, 50/60 Hz, delta connection									
MKK415-D-5-01	5.0	7	6.0	8	3 · 32	121 x 164	1.1	B25667B5966A375	6
MKK415-D-6.2-01	6.2	8	7.5	10	3 · 39	121 x 164	1.2	B25667B5127A375	6
MKK415-D-10.4-01	10.4	15	12.5	17	3 · 64	121 x 164	1.2	B25667B4197A375	6
MKK415-D-12.5-01	12.5	17	15.0	21	3 · 77	121 x 164	1.3	B25667B4237A375	6
MKK415-D-15-01	15.0	21	18.0	25	3 · 93	121 x 164	1.4	B25667B4287A375	6
MKK415-D-16.7-01	16.7	23	20.0	28	3 · 103	121 x 164	1.5	B25667B4307A375	6
MKK415-D-20-01	20.8	29	25.0[2]	35[2]	3 · 128	121 x 200	1.7	B25667B4387A375	4
MKK415-D-25-01[3]	25.0	35	–	–	3 · 154	142 x 200	2.1	B25667B4467A375	4
Rated voltage 440 VAC, 50/60 Hz, delta connection									
MKK440-D-5-01	5.0	7	6.0	8	3 · 27	121 x 164	1.2	B25667B4826A375	6
MKK440-D-7.5-01	7.5	10	9.0	12	3 · 41	121 x 164	1.2	B25667B4127A375	6
MKK440-D-10.4-01	10.4	14	12.5	16	3 · 57	121 x 164	1.3	B25667B4177A375	6
MKK440-D-12.5-01	12.5	16	15.0	20	3 · 69	121 x 164	1.4	B25667B4207A375	6
MKK440-D-14.2-01	14.2	19	17.0	22	3 · 77	121 x 164	1.3	B25667B4237A375	6
MKK440-D-15-01	15.0	20	18.0	24	3 · 83	121 x 164	1.4	B25667B4247A375	6
MKK440-D-16.7-01	16.7	22	20.0	26	3 · 92	121 x 200	1.8	B25667B4277A375	4
MKK440-D-18.8-01	18.8	25	22.6	30	3 · 103	121 x 164	1.5	B25667B4307A375	6
MKK440-D-20-01	20.0	26	24.0	31	3 · 111	121 x 200	1.7	B25667B4337A375	4
MKK440-D-25-01	25.0	33	30.0	39	3 · 137	142 x 200	2.0	B25667B4417A375	4
MKK440-D-28.1-01[3]	28.1	37	–	–	3 · 154	142 x 200	2.1	B25667B4467A375	4
MKK440-D-30-01[4]	30.0[1]	39[1]	–	–	3 · 164	142 x 200	2.4	B25667B4497A375	4
MKK440-D-33-01[3, 4]	33.0	43	–	–	3 · 181	142 x 200	2.5	B25667B4547A375	4

Customized products available upon request. Minimum order quantity 200 pieces.

[1] Temperature class deviation –40/C max. 50 °C
[2] Temperature class deviation –40/B max. 45 °C
[3] Useful life up to 100 000 h
[4] Discharge time ≤ 75 V in 90 s
* Packing units for capacitors equal minimum order quantity.
Orders will be rounded up to packing unit or multiple thereof.

PhaseCap Premium PFC Capacitors

Gas-impregnated ■ Dry type ■ Concentric winding ■ Wavy cut ■ Triple safety system

Three-phase capacitors

Type	50 Hz		60 Hz		C_R	d x h	Weight	Ordering code	Packing unit*
	Output kvar	I_R A	Output kvar	I_R A	µF	mm	kg		
Rated voltage 480 VAC, 50/60 Hz, delta connection									
MKK480-D-6.25-01	6.25	8	7.5	9	3 · 29	121 x 164	1.2	B25667B4866A375	6
MKK480-D-8.3-01	8.3	10	10.0	12	3 · 39	121 x 164	1.2	B25667B5127A375	6
MKK480-D-10.4-01	10.4	12	12.5	14	3 · 48	121 x 164	1.3	B25667B5147A375	6
MKK480-D-12.5-01	12.5	15	15.0	18	3 · 58	121 x 164	1.5	B25667B5177A375	6
MKK480-D-15-01	15.0	18	18.0	22	3 · 69	121 x 164	1.4	B25667B4207A375	6
MKK480-D-16.7-01	16.7	20	20.0	24	3 · 77	121 x 200	1.8	B25667B5237A375	4
MKK480-D-20-01	20.0	22	24.0	26	3 · 92	121 x 200	1.8	B25667B4277A375	4
MKK480-D-25-01	25.0	30	–	–	3 · 115	142 x 200	2.2	B25667B4347A375	4
MKK480-D-30-01[3]	30.0[1]	36[1]	–	–	3 · 138	142 x 200	2.4	B25667B4417A365	4
Rated voltage 525 VAC, 50/60 Hz, delta connection									
MKK525-D-8.3-01	8.3	9	10.0	11	3 · 32	121 x 164	1.1	B25667B5966A375	6
MKK525-D-10-01	10.0	11	12.0	13	3 · 39	121 x 164	1.2	B25667B5127A375	6
MKK525-D-12.5-01	12.5	14	15.0	17	3 · 48	121 x 164	1.3	B25667B5147A375	6
MKK525-D-15-01	15.0	17	18.0	20	3 · 58	121 x 164	1.5	B25667B5177A375	6
MKK525-D-16.7-01	16.7	18	20.0	21	3 · 64	121 x 164	1.6	B25667B5197A375	6
MKK525-D-20-01	20.0	22	24.0	26	3 · 77	121 x 200	1.8	B25667B5237A375	4
MKK525-D-25-01	25.0	28	–	–	3 · 96	142 x 200	2.3	B25667B5287A375	4
MKK525-D-30-01[4]	30.0[1]	33[1]	–	–	3 · 115	142 x 200	2.4	B25667B5347A375	4

Customized products available upon request. Minimum order quantity 200 pieces.

Discharge resistors pre-mounted

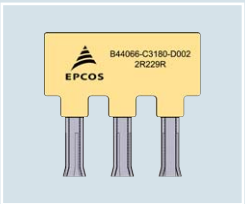

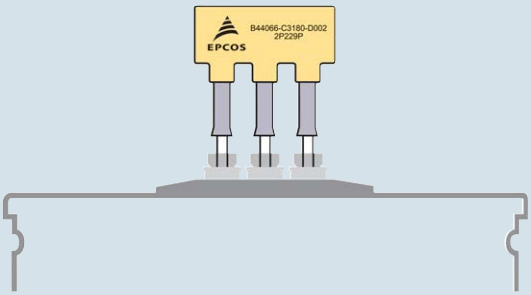

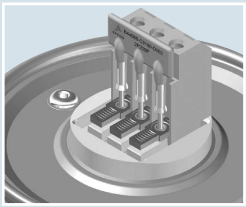

[1] Temperature class deviation –40/C max. 50 °C
[2] Temperature class deviation –40/B max. 45 °C
[3] Useful life up to 100 000 h
[4] Discharge time ≤ 75 V in 90 s
* Packing units for capacitors equal minimum order quantity.
Orders will be rounded up to packing unit or multiple thereof.

PhaseCap Premium PFC Capacitors

Gas-impregnated ■ Dry type ■ Concentric winding ■ Wavy cut ■ Triple safety system

PhaseCap

Single-phase capacitors

Type	50 Hz		60 Hz		C_R	d x h	Weight	Ordering code	Packing unit*
	Output kvar	I_R A	Output kvar	I_R A	µF	mm	kg		
Rated voltage 230 VAC, 50/60 Hz									
MKK230-I-5-01	5.2	23	6.2	28	313	121 x 164	1.1	B25667B2317A175	6
MKK230-I-6.6-01	6.6	29	7.9	34	397	121 x 164	1.4	B25667B2397A175	6
MKK230-I-7.5-01	7.5	32	9.0	38	457	121 x 164	1.3	B25667B2457A175	6
MKK230-I-8.3-01	8.3	36	10.0	43	502	121 x 164	1.3	B25667B2507A175	6
MKK230-I-9.1-01[1)]	9.1	38	–	–	548	121 x 164	1.4	B25667B2557A175	6
Rated voltage 400 VAC, 50/60 Hz									
MKK400-I-10.4-01	10.4	26	12.5	31	207	121 x 164	1.2	B25667B3207A175	6
MKK400-I-12.5-01	12.5	31	15.0	37	249	121 x 164	1.3	B25667B3247A175	6
Rated voltage 440 VAC, 50/60 Hz									
MKK440-I-6.9-01	6.9	16	8.3	19	116	121 x 164	1.3	B25667B5117A175	6
MKK440-I-8.3-01	8.3	19	10.0	23	144	121 x 164	1.5	B25667B5147A175	6
Rated voltage 525 VAC, 50/60 Hz									
MKK525-I-10-01	10.0	19	12.0	23	116	121 x 164	1.5	B25667B5117A175	6
MKK525-I-12.5-01	12.5	24	15.0	29	144	121 x 164	1.5	B25667B5147A175	6
MKK525-I-15-01[1)]	15.0	29	18.0	35	173	121 x 200	1.7	B25667B5177A175	4
MKK525-I-18.6-01[1)]	18.6	36	22.3	43	215	142 x 200	2.0	B25667B5217A175	4

Plastic protective case for capacitor

Capacitor Ø	For cable gland	Cable diameter outside	Dimensions				Ordering code
			l_1	l_2	l_3	h	
mm		mm	mm	mm	mm	mm	
121 x 164	IP54	9–13	134	110	177	243	B44066X9122A000
121 x 200 / 142 x 200	IP54	10–18	154.5	130.5	186	280	B44066X9142A000

Plastic protective terminal cover

Capacitor Ø	For cable gland	Cable diameter outside	Dimensions		Ordering code
			Ø d_1	Ø d_2	
mm		mm	mm	mm	
121 x 164	PG 13.5	9–13	116	125	B44066K1211
121 x 200	PG 16	10–14	116	125	B44066K1212
142 x 200	PG 21	14–18	137	145	B44066K1421

Customized products available upon request. Minimum order quantity 200 pieces.

[1)] Discharge time ≤ 75 V in 90 s
* Packing units for capacitors equal minimum order quantity. Orders will be rounded up to packing unit or multiple thereof.

Protective terminal cover

Protective case for capacitor

Dimensional drawings

Capacitor

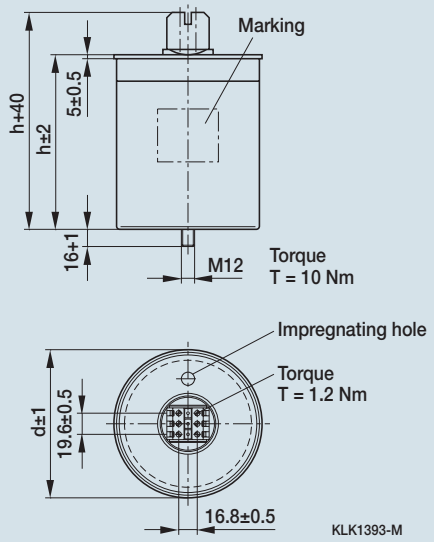

Creepage distance 12.7 mm min.
Clearance 9.6 mm min.

Protective case for capacitor

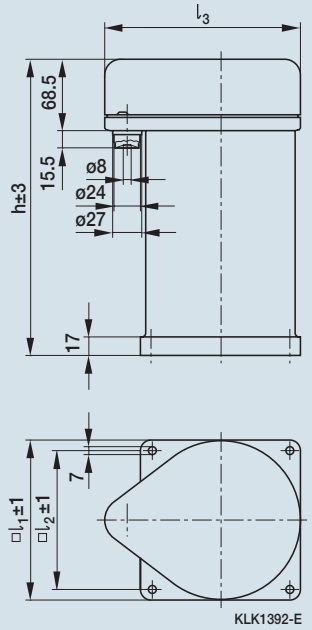

Mounting

Toothed washer J 12.5 DIN 6797

Hex nut BM12 DIN 439

or

nut C61010-A415-C15

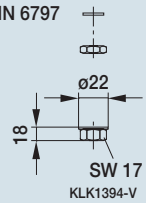

Protective cover for terminal

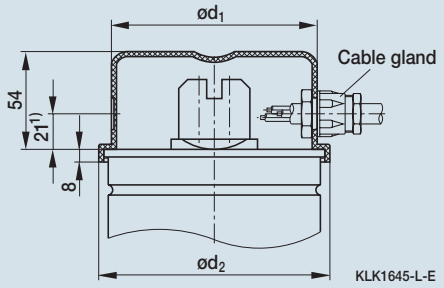

[1)] Perforation for second cable gland

PhaseCap HD PFC Capacitors

Heavy-duty type ■ Up to 60 kvar ■ Gas-impregnated ■ Wavy cut ■ Triple safety system

PhaseCap HD

General

The new PhaseCap HD series is a follow-on development of the MKK AC series, covering the power range above 40 through 60 kvar with just one capacitor in a cylindrical aluminum case. The PhaseCap HD is especially intended for industrial applications with demands for long life, constant capacitance and high inrush current withstand capability, up to 200 · I_R.
Such applications require typical power steps of 25 or 50 kvar switched by a PFC controller via each capacitor contactor. The new MKK AC series was developed to increase packing density per bank and cut component costs.

This means 60 kvar with only one capacitor in a cylindrical aluminum case, improved thermal response and simplified installation.

Applications

- Power factor correction
- Detuned capacitor banks

Features

Electrical

- Low losses
- High pulse current withstand capability (up to 200 · I_R)
- Corona-free

Mechanical and maintenance

- Reduced mounting costs
- Maintenance-free

Safety

- Self-healing
- Overpressure disconnector
- Touch-proof terminals
- Long-term approved

Environmental

- Dry design, inert gas
- No oil leakage

The compact PhaseCap HD capacitor is a self-healing, metalized polypropylene film capacitor. The current-carrying metal layer (electrode) is vapor-deposited onto one side of the film.

Compact design – low height, weight and volume

The entire capacitor is composed of three single-phase element stacks. The electrodes are connected by metal spraying the face ends of the winding elements. The capacitor elements are delta connected. The winding elements are housed in a cylindrical aluminum case and hermetically sealed by a press-rolled metal lid.

Triple safety system

- Dry technology: instead of a liquid impregnating agent, the capacitor is filled with gas. So there is no risk of leaking oil.
- Self-healing: the capacitor repairs itself after overload (to IEC 60831).
- Overpressure disconnector: refer to page 9.

Innovative and reliable SIGUT connection technology

SIGUT terminals ensure reliable and straightforward connection, with benefits like:

- protection against electric shock hazard (IP20 to VDE 0106 part 100)
- separate connection of discharge resistors
- clamping device to prevent loosening of screws
- cable cross-sections up to 35 mm^2
- max. 130 A total RMS current

Life expectancy of up to 130 000 operating hours

After a long drying phase under vacuum to eliminate moisture from the active element, the capacitor is impregnated. The case is filled with inert gas and sealed. Then routine tests are performed for gas leakage.

This production process helps to avoid oxidation and partial discharges (corona effect), promoting capacitance stability over a long period, an essential in detuned PFC.

Highest inrush current withstand capability is crucial

Capacitors used for power factor correction undergo a lot of switching operations. The high inrush currents that go along with this must be handled without degrading useful life. The pulse strength of this technology comes in particular from the enlarged, sensitive contact area (improved metal spraying). The breakthrough came with a Siemens patent called the wavy cut, plus heavy-edge film design. PhaseCap HD capacitors can handle inrush currents of up to 200 times rated current (max. 5 000 switching operations p.a. according to IEC 60831 standard).

PhaseCap HD PFC Capacitors

Heavy-duty type ■ Up to 60 kvar ■ Gas-impregnated ■ Wavy cut ■ Triple safety system

Technical data and limit values		
Standards IEC 60831-1+2, EN 60831-1+2, UL 810 5th edition		
Overvoltage	V_{max}	V_R + 10% (up to 8 h daily) / V_R + 15% (up to 30 min daily) / V_R + 20% (up to 5 min daily) / V_R + 30% (up to 1 min daily)
Overcurrent	I_{max}	up to 1.3 · I_R (up to 1.5 · I_R including combined effects of harmonics, overvoltages and capacitance tolerance)
Inrush current	I_S	up to 200 · I_R
Losses: **– Dielectric** **– Total***		 < 0.2 W/kvar < 0.45 W/kvar
Rated frequency	f	50/60 Hz
Capacitance tolerance		–5% / +10%
Test voltage, terminal/terminal	V_{TT}	2.15 · V_{R1}, AC, 10 s
Test voltage, terminal/case	V_{TC}	up to $V_R \leq$ 660 V: 3000 VAC, 10 s
Mean life expectancy	$t_{LD(Co)}$	up to 130000 h
Ambient temperature		–25/D; max. temp. 55 °C; max. mean 24 h = 45 °C; max. mean 1 year = 35 °C; lowest temperature = –25 °C
Cooling		natural or forced
Humidity	H_{rel}	max. 95%
Altitude		max. 4000 m above sea level
Mounting position		upright
Mounting and grounding		threaded M12 stud on bottom of case
Safety		dry technology, overpressure disconnector, self-healing, maximum allowed fault current 10000 A in accordance with UL 810 standard
Discharge resistors		discharge module included in delivery
Case		extruded aluminum can
Enclosure		IP20, indoor mounting
Dielectric		polypropylene film
Impregnation		inert gas, Nitrogen (N_2)
Terminals		SIGUT terminal strip with electric shock protection (IP20), (VDE 0106 part 100), max. 35 mm² cable cross-section, max. current 130 A
Number of switching operations		max. 5000 switchings per year according to IEC 60831-1+/2

* Without discharge resistor

PhaseCap HD PFC Capacitors

Heavy-duty type ■ Up to 60 kvar ■ Gas-impregnated ■ Wavy cut ■ Triple safety system

PhaseCap HD

Three-phase capacitors

Type	50 Hz		60 Hz		C_R	d x h	Weight	Ordering code	Packing unit[2]
	Output kvar	I_R A	Output kvar	I_R A	µF	mm	v		
Rated voltage 400 VAC, 50/60 Hz, delta connection									
MKK400-D-40-21	40	58	48	69	3 · 265	142 x 317	4.4	B25669A3796J375	2
MKK400-D-50-21	50	72	60[1]	87[1]	3 · 332	142 x 355	4.7	B25669A3996J375	2
(Suitable also for 415 V with 7.6% higher output)									
Rated voltage 440 VAC, 50/60 Hz, delta connection									
MKK440-D-40-21	40	52	48	63	3 · 219	142 x 317	4.4	B25669A4657J375	2
MKK440-D-50-21	50	66	60[1]	79[1]	3 · 274	142 x 355	4.7	B25669A4827J375	2
MKK440-D-56-21	56	74	–	–	3 · 307	142 x 355	4.7	B25669A4927J375	2
Rated voltage 525 VAC, 50/60 Hz, delta connection									
MKK525-D-40-21	40	44	48	53	3 · 154	142 x 355	4.7	B25669A5467J375	2

Customized products available upon request. Minimum order quantity 200 pieces.

[1] Temperature class deviation –25/B max. 45 °C
[2] Packing units for capacitors equal minimum order quantity. Orders will be rounded up to packing unit or multiple thereof.

Overpressure disconnector (tear-off fuse)

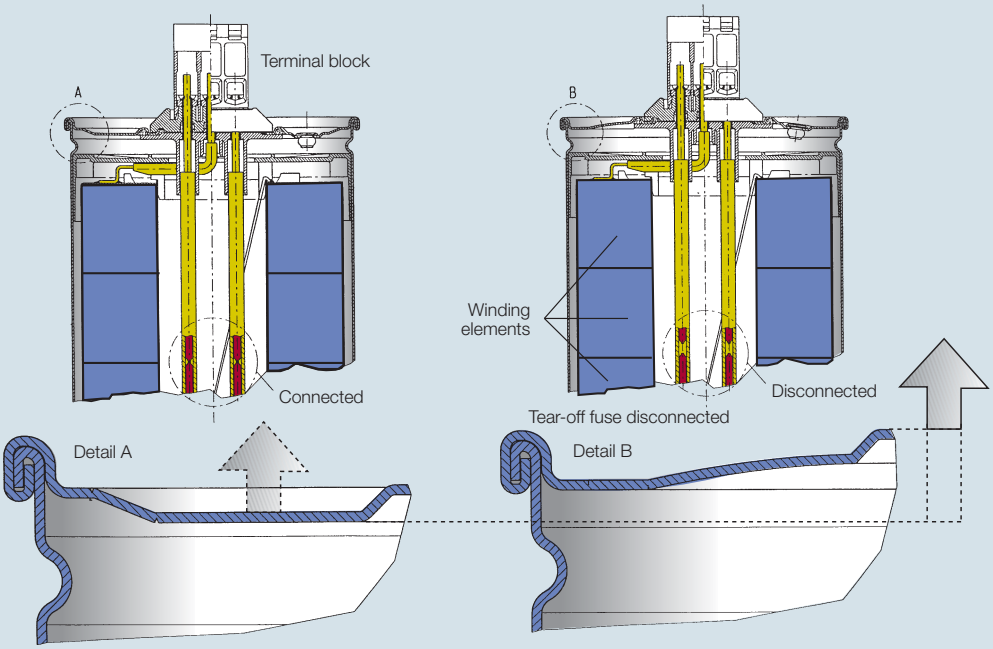

Dimensional drawings

Capacitor

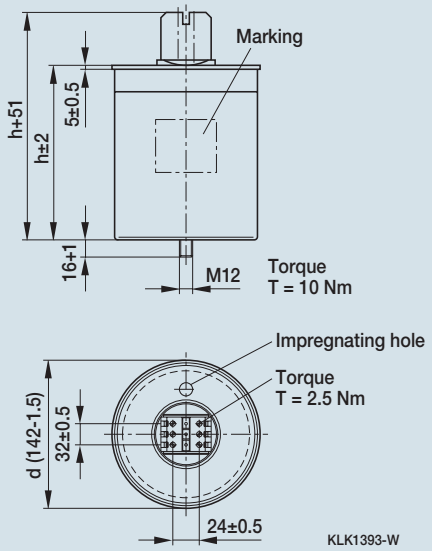

Creepage distance 15 mm min.
Clearance 12 mm min.

Mounting

Toothed washer J 12.5 DIN 6797

Hex nut BM12 DIN 439

or

nut C61010-A415-C15

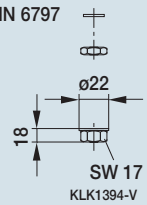

WindCap PFC Capacitors

For PFC in wind turbines ■ 690 V grids ■ Harmonic filtering applications

WindCap

General

WindCap heavy-duty AC capacitors in cylindrical aluminum cases have been designed for power factor correction and harmonics filtering in wind turbine and industrial applications with 690 V requirements.
The WindCap series demonstrates excellent performance in tough conditions. High reliability and low life cycle cost are achieved by a mean life expectancy of up to 130 000 hours. Wind turbine generators have a power factor < 1, meaning that producers have to add power factor correction to improve performance. WindCap capacitors provide relief from reactive power and reduce ohmic losses in transformers, supply cables and other electrical distribution equipment.

Applications

- Wind turbine generator applications
- Industrial applications with distorted electrical networks
- Harmonic filtering
- For 690 / 800 V grids

Features

Electrical

- Low losses
- High pulse current withstand capability (up to 300 · I_R)
- Corona-free

Mechanical and maintenance

- Reduced mounting costs
- Any mounting position
- Maintenance-free

Safety

- Self-healing
- Overpressure disconnector
- Touch-proof terminals
- Long-term approved MKK AC design & technology

Environmental

- Dry design, inert gas
- No oil leakage

The compact WindCap capacitor is a self-healing, metalized polypropylene film capacitor using MKK technology with self-healing properties. The current-carrying metal layer (electrode) is vapor-deposited onto one side of the film.

Compact design – low height, weight and volume

Three electrically separate capacitor elements are wound concentrically in a single operation onto an insulated metal core tube, which guarantees excellent winding precision. The electrodes are connected by metal spraying the face ends of the winding elements.

The capacitor elements are delta connected to minimize losses. The compact MKK winding elements are housed in a cylindrical aluminum case and hermetically sealed by a press-rolled metal lid.

Triple safety system

- Dry technology: instead of a liquid impregnating agent, the capacitor is filled with gas. So there is no risk of leaking oil.
- Self-healing: the capacitor repairs itself after overload (to IEC 60831).
- Overpressure disconnector: refer to page 9.

Innovative and reliable SIGUT connection technology

SIGUT terminals ensure reliable and straightforward connection, even in a parallel capacitor circuit, with benefits like:

- simplified parallel connection
- protection against electric shock hazard (IP20 to VDE 0106 part 100)
- separate connection of discharge resistors
- clamping device to prevent loosening of screws
- cable cross-sections up to 16 mm²
- max. 50 A total RMS current

Life expectancy of up to 130 000 operating hours

After a long drying phase under vacuum to eliminate moisture from the active element, the capacitor is impregnated. The case is filled with inert gas and sealed. Then routine tests are performed for gas leakage.

This production process helps to avoid oxidation and partial discharges (corona effect), promoting capacitance stability over a long period, an essential in detuned PFC.

High inrush current withstand capability is crucial

Capacitors used for power factor correction undergo a lot of switching operations. The high inrush currents that go along with this must be handled without degrading useful life. The pulse strength of this technology comes in particular from the enlarged, sensitive contact area (improved metal spraying). The breakthrough came with a Siemens patent called the wavy cut, plus heavy-edge film design. WindCap capacitors can handle inrush currents of up to 300 times rated current (max. 5 000 switching operations p.a. according IEC 60831 standard).

WindCap PFC Capacitors

For PFC in wind turbines ■ 690 V grids ■ Harmonic filtering applications

Technical data and limit values		
Standards IEC 60831-1+2, EN 60831-1+2, UL 810 5th edition		
Overvoltage	V_{max}	V_R + 10% (up to 8 h daily) / V_R + 15% (up to 30 min daily) / V_R + 20% (up to 5 min daily) / V_R + 30% (up to 1 min daily)
Overcurrent	I_{max}	up to 1.3 · I_R (up to 1.5 · I_R including combined effects of harmonics, overvoltages and capacitance tolerance)
Inrush current	I_S	up to 300 · I_R
Losses: **– Dielectric** **– Total***		 < 0.2 W/kvar < 0.4 W/kvar
Rated frequency	f	50/60 Hz
Capacitance tolerance		–5% / +10%
Test voltage, terminal/terminal	V_{TT}	2.15 · V_{R1}, AC, 10 s
Test voltage, terminal/case	V_{TC}	6000 VAC, 10 s
Mean life expectancy	$t_{LD(Co)}$	up to 130000 h
Ambient temperature		–25/D; max. temp. 55 °C; max. mean 24 h = 45 °C; max. mean 1 year = 35 °C; lowest temperature = –25 °C
Cooling		natural or forced
Humidity	H_{rel}	max. 95%
Altitude		max. 4000 m above sea level
Mounting position		random
Mounting and grounding		threaded M12 stud on bottom of case
Safety		dry technology, overpressure disconnector, self-healing, maximum allowed fault current 10000 A in accordance with UL 810 standard
Discharge resistors		discharge module included
Case		extruded aluminum can
Enclosure		IP20, indoor mounting (optionally IP54)
Dielectric		polypropylene film
Impregnation		inert gas, Nitrogen (N_2)
Terminals		SIGUT terminal strip with electric shock protection (IP20), (VDE 0106 part 100), max. 16 mm² cable cross-section, max. current 50 A
Certification		cUL file # E238746
Number of switching operations		max. 5000 switchings per year according to IEC 60831-1+/2

* Without discharge resistor

WindCap PFC Capacitors

For PFC in wind turbines ■ 690 V grids ■ Harmonic filtering applications

WindCap

Three-phase capacitors

Type	50 Hz		60 Hz		C_R	d x h	Weight	Ordering code	Packing unit[1]
	Output kvar	I_R A	Output kvar	I_R A	µF	mm	kg		
Rated voltage 690 VAC, 50/60 Hz, delta connection									
MKK690-D-5-11	5.0	4.2	6	5.0	3 · 11	121 x 164	1.3	B25668A6336A375	6
MKK690-D-10-11	10.0	8.4	12	10.1	3 · 23	121 x 164	1.4	B25668A6676A375	6
MKK690-D-12.5-11	12.5	10.5	15	12.6	3 · 28	121 x 164	1.5	B25668A6836A375	6
MKK690-D-15-11	15.0	12.6	18	15.1	3 · 34	121 x 164	1.5	B25668A6107A375	6
MKK690-D-20.8-11	20.8	17.5	25	21.0	3 · 47	142 x 200	2.0	B25668A6137A375	4
MKK690-D-25-11	25.0	21.0	30	25.1	3 · 56	142 x 200	2.2	B25668A6167A375	4
Rated voltage 765 VAC, 50/60 Hz, delta connection									
MKK765-D-30-11	30	23	36	28	3 · 55	142 x 200	2.4	B25668A7167J375	4
Rated voltage 800 VAC, 50/60 Hz, delta connection									
MKK800-D-5-11	5.0	3.6	6	4.3	3 · 8	121 x 164	1.2	B25668A7246A375	6
MKK800-D-10-11	10.0	7.2	12	8.7	3 · 17	121 x 164	1.3	B25668A7496A375	6
MKK800-D-12.5-11	12.5	9.0	15	11.0	3 · 21	121 x 164	1.4	B25668A7626A375	6
MKK800-D-15-11	15.0	11.0	18	13.0	3 · 25	121 x 164	1.5	B25668A7746A375	6
MKK800-D-20-11	20.0	14.5	24	17.3	3 · 33	142 x 200	2.0	B25668A7996A375	4
MKK800-D-25-11	25.0	18.0	30	22.0	3 · 41	142 x 200	2.3	B25668A7127A375	4
MKK800-D-28-11	28.0	20.0	33	24.0	3 · 46	142 x 200	2.4	B25668A7137A375	4

Plastic protective case for capacitor

For capacitor diameter	Degree of protection	l_1 x h	l_3	l_2	Weight	Ordering code
mm		mm	mm	mm	kg	
121 x 164	IP54	134 x 243	177	110	0.3	B44066X9122A000
121 x 200	IP54	154 x 280	186	130.5	0.6	B44066X9142A000
142 x 200	IP54	154 x 280	186	130.5	0.6	B44066X9142A000

Plastic protective terminal cover

For capacitor diameter	For cable gland	For cable	Ø d_1	Ø d_2	Ordering code
mm		mm	mm	mm	
121 x 164	PG 13.5	9–13	116	125	B44066K1211
121 x 200	PG 16	10–14	116	125	B44066K1212
142 x 200	PG 21	14–18	137	145	B44066K1421

Customized products available upon request. Minimum order quantity 200 pieces.

[1] Packing units for capacitors equal minimum order quantity. Orders will be rounded up to packing unit or multiple thereof.

Protective terminal cover

Protective case for capacitor

Dimensional drawings

Capacitor

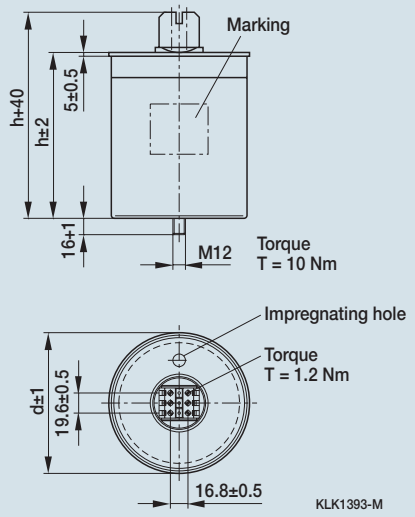

Creepage distance 12.7 mm min.
Clearance 9.6 mm min.

Protective case for capacitor

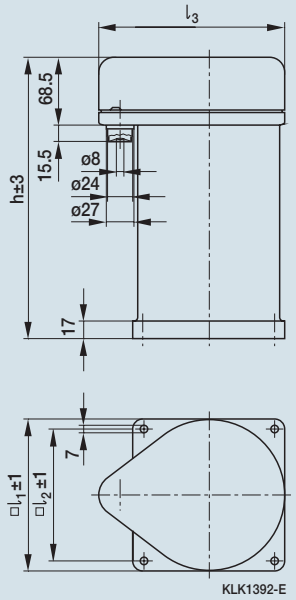

Mounting

Toothed washer J 12.5 DIN 6797

Hex nut BM12 DIN 439

or

nut C61010-A415-C15

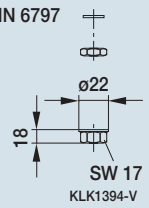

Protective cover for terminal

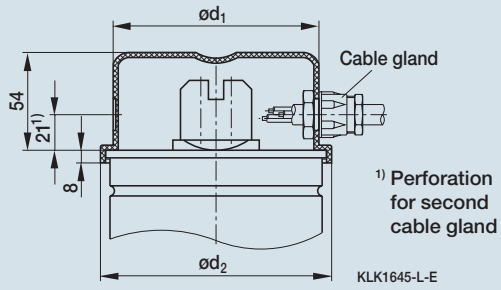

[1)] Perforation for second cable gland

Overpressure disconnector (tear-off fuse)

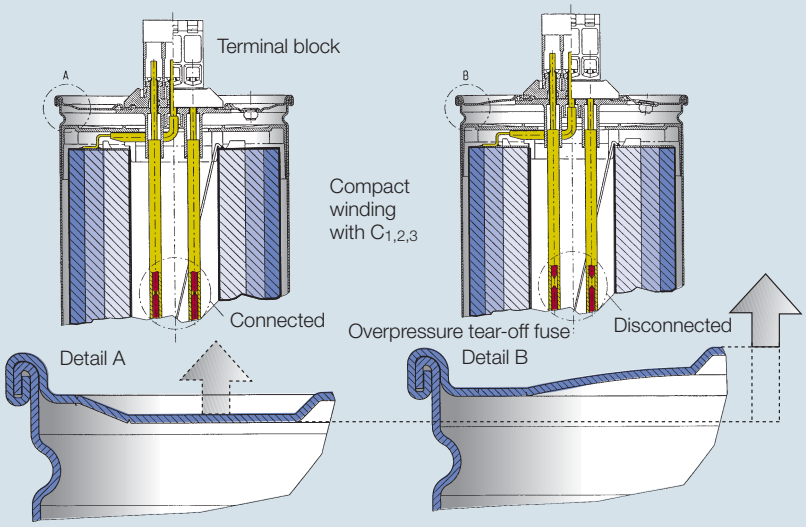

PhiCap PFC Capacitors

Resin (Polyurethane) impregnated ■ Stacked winding ■ Dual safety system

PhiCap

General

PhiCaps are a tried and tested series of MKP (metalized polypropylene) capacitors from EPCOS which have been used for PFC applications for more than 15 years.

The power range varies from 0.5 to 30.0 kvar and 0.7 to 6.0 kvar per single capacitor can, depending on a three-phase or single-phase capacitor design. The PhiCap capacitor is especially intended for power factor correction in industrial and semi-industrial applications. The capacitors are manufactured using metalized polypropylene film as the dielectric and housed in a cylindrical aluminum case.

Applications

- Power factor correction (PFC)
- Automatic capacitor banks
- Fixed PFC applications, e.g. motor compensation
- Detuned PFC systems

Features

Electrical

- Up to 30 kvar per case for three-phase applications
- Up to 6 kvar per case for single-phase applications
- Long life expectancy of up to 100 000 hours
- High pulse current withstand capability (up to 200 · I_R)

Mechanical and maintenance

- Reduced mounting costs, easy installation and connection
- Low weight and compact volume
- Maintenance-free

Safety

- Self-healing
- Overpressure disconnector
- Touch-proof terminal

The PhiCap is a self-healing, metalized polypropylene film capacitor. The current-carrying AlZn metal layer is vapor-deposited onto one side of the film.

Compact design – low weight and small volume

The entire three-phase capacitor is composed of three single-phase element stacks. The electrodes are connected by metal spraying the face ends of the winding elements. The winding elements are encapsulated in a cylindrical aluminum case and hermetically sealed either by a press-rolled metal lid or plastic disk with fast-on terminals.

Dual safety system

- Self-healing: the capacitor repairs itself after overload (to IEC 60831). Self-healing capability prevents permanent dielectric breakdown in case of sporadic voltage surges, overcurrent or overtemperature (to IEC 60831).
- Overpressure disconnector: refer to page 9.

Connection technology

- SIGUT block-type terminal for B32344 series: IP20, innovative clamping system.
- Fast-on terminals for B32340 and B32343 series.
- Discharge resistors are included in shipment.

PhiCap capacitor selection

To specify and select capacitors for PFC, several factors affecting the performance and the expected useful life of the capacitors must be considered.

- Voltage
- Harmonics
- Temperature
- Total RMS current
- Inrush current / switching operations

Permanent overvoltage shortens the useful life of a capacitor. The capacitor's rated voltage must be equal or higher than the operating voltage of the circuit to which it is connected.

Harmonics produce overvoltage and overcurrent on the capacitors themselves. If the total harmonics distortion level for voltage (THD-V) e.g. exceeds 5%, serious damage to the installation may be caused by the resonance of the circuit.

In such cases usage of series reactors (detuning) is recommended.

Operation of the capacitors above the upper category temperature level will accelerate degradation of the dielectric and shorten the capacitor's useful life.

By keeping min. 20 mm spacing and PhiCap capacitors mounted in upright position, better thermal conditions will ensure best performance and a longer useful life.

Residual voltage should not exceed 10% of rated voltage for re-switching capacitors. During the charging period of the capacitors the current is very high – if they are connected in automatic capacitor banks, it is very likely that discharged capacitors are connected to charged ones already connected to the grid. In such cases the maximum permissible current peak reaches values up to 150 · I_R.

During the switching process thermal and electrodynamic stresses are developed caused by transient overcurrents of high amplitude and frequency and may damage the system. Capacitor contactors with inrush current limiting resistors or series-inductance (e.g. detuned harmonic filter) will avoid excessive transient currents.

PhiCap PFC Capacitors

Resin (Polyurethane) impregnated ■ Stacked winding ■ Dual safety system

Power factor improvement

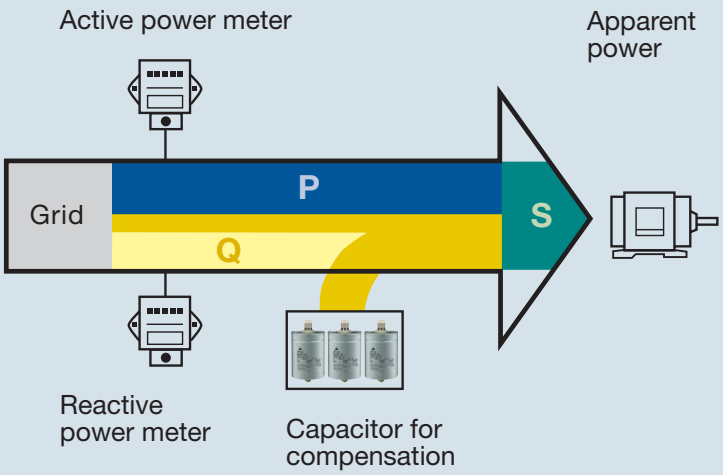

Life expectancy of up to 100 000 operating hours

After a long drying phase to eliminate moisture from the active element, the capacitor is impregnated. The case is filled with biodegradable soft resin.

This production process helps to avoid oxidation and partial discharges (corona effect), promoting capacitance stability over a long period, an essential in detuned PFC.

High inrush current withstand capability is crucial

Capacitors used for power factor correction undergo a lot of switching operations. The high inrush currents that go along with this must be handled without degrading useful life. The pulse strength of this technology comes in particular from the enlarged, sensitive contact area (improved metal spraying).

PhiCap capacitors can handle inrush currents of up to 200 times rated current (max. 5 000 switching operations p.a. according to IEC 60831 standard).

Overpressure disconnector

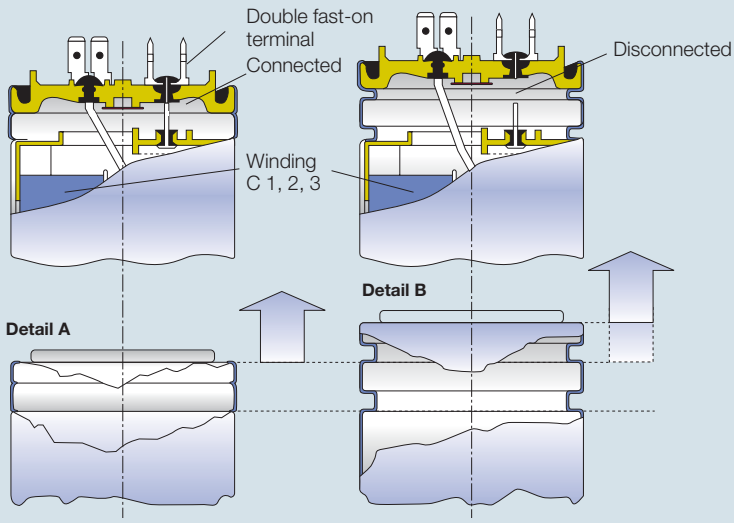

PhiCap PFC Capacitors

Resin (Polyurethane) impregnated ■ Stacked winding ■ Dual safety system

PhiCap

Technical data and limit values		
Standards IEC 60831-1+2, IS: 13340/41		
Overvoltage	V_{max}	V_R + 10% (up to 8 h daily) / V_R + 15% (up to 30 min daily) / V_R + 20% (up to 5 min daily) / V_R + 30% (up to 1 min daily)
Overcurrent	I_{max}	up to 1.3 · I_R (up to 1.5 · I_R including combined effects of harmonics, overvoltages and capacitance)
Inrush current	I_S	up to 200 · I_R
Losses: **– Dielectric** **– Total***		 < 0.2 W/kvar < 0.45 W/kvar
Rated frequency	f	50/60 Hz
Capacitance tolerance		–5% /10%
Test voltage, terminal/terminal	V_{TT}	2.15 · V_R, AC, 2 s
Test voltage, terminal/case	V_{TC}	3000 VAC, 10 s
Mean life expectancy	$t_{LD(Co)}$	up to 100000 h
Ambient temperature		–25/D; max. temp. 55 °C; max. mean 24 h = 45 °C; max. mean 1 year = 35 °C; lowest temperature = –25 °C
Cooling		natural or forced
Humidity	H_{rel}	max. 95%
Altitude		max. 4000 m above sea level
Mounting position		upright
Mounting and grounding		threaded M12 (10 Nm) for case size diam. > 53 mm M8 (4 Nm) for case size diam. ≤ 53 mm
Safety		Self-healing technology, overpressure disconnector, maximum allowed fault current 10000 A in accordance with UL 810 standard
Discharge resistors		discharge module included
Case		extruded aluminum can
Enclosure		IP20, indoor mounting (optional IP54)
Dielectric		polypropylene film
Impregnation		biodegradable soft resin
Terminals		SIGUT screw terminals for B32344 series, max. current 60 A, max. 16 mm² cable cross-section, fast-on terminals for B32340 and B32343 series
Number of switching operations		max. 5000 switchings per year according to IEC 60831-1+/2

* Without discharge resistor

PhiCap PFC Capacitors

Resin (Polyurethane) impregnated ■ Stacked winding ■ Dual safety system

Three-phase capacitors

Type	50 Hz		60 Hz		C_R	d x h	Weight	Ordering code	Packing unit[1]
	Output kvar	I_R A	Output kvar	I_R A	µF	mm	kg		
Rated voltage 230 VAC, 50/60 Hz, delta connection									
MKP230-D-0.5	0.5	1.3	0.6	1.6	3 · 10	53 x 114	0.3	B32343C2002A530	12
MKP230-D-0.7	0.7	1.9	0.9	2.3	3 · 15	53 x 114	0.3	B32343C2002A730	12
MKP230-D-1.0	1.0	2.5	1.2	3.0	3 · 20	63.5 x 129	0.3	B32343C2012A030	12
MKP230-D-1.5	1.5	3.8	1.8	4.6	3 · 30	63.5 x 129	0.4	B32343C2012A530	12
MKP230-D-2.0	2.0	5.0	2.5	6.0	3 · 42	79.5 x 138	0.4	B32344D2022A030	6
MKP230-D-2.5	2.5	6.3	3.0	7.5	3 · 50	79.5 x 138	0.4	B32344D2022A530	6
MKP230-D-5.0	5.0	12.6	6.0	15.1	3 · 100	79.5 x 198	0.6	B32344D2052A030	6
MKP230-D-7.5	7.5	18.8	9.0	22.6	3 · 150	89.5 x 198	0.8	B32344D2072A530	4
MKP230-D-10.0	10.0	25.1	12.0	30.2	3 · 200	89.5 x 273	1.2	B32344D2102A030	4
MKP230-D-12.5	12.5	31.4	15.0	37.7	3 · 250	89.5 x 348	1.5	B32344D2122A530	4
MKP230-D-15.0	15.0	37.7	–	–	3 · 300	89.5 x 348	1.5	B32344D2152A030	4
Rated voltage 400 VAC, 50/60 Hz, delta connection									
MKP400-D-1.0	1.0	1.4	1.2	1.7	3 · 7	53 x 114	0.3	B32343C4012A000	12
MKP400-D-1.5	1.5	2.2	1.8	2.6	3 · 10	53 x 114	0.3	B32343C4012A500	12
MKP400-D-2.0	2.0	2.9	2.4	3.5	3 · 13	63.5 x 129	0.4	B32343C4022A000	12
MKP400-D-2.5	2.5	3.6	3.0	4.3	3 · 17	63.5 x 129	0.4	B32343C4022A500	12
MKP400-D-5.0	5.0	7.2	6.0	8.6	3 · 33	63.5 x 129	0.4	B32343C4052A000	12
MKP400-D-6.3	6.3	9.1	7.5	11.0	3 · 42	79.5 x 160	0.5	B32344D4071A500	6
MKP400-D-7.5	7.5	10.8	9.0	13.0	3 · 50	79.5 x 160	0.5	B32344D4072A500	6
MKP400-D-8.3	8.3	12.0	10.0	14.5	3 · 55	79.5 x 160	0.5	B32344D4101A000	6
MKP400-D-10.0	10.0	14.5	12.0	17.3	3 · 67	79.5 x 198	0.6	B32344D4102A000	6
MKP400-D-12.5	12.5	18.1	15.0	21.7	3 · 83	89.5 x 198	0.8	B32344D4122A500	4
MKP400-D-15.0	15.0	21.7	18.0	26.0	3 · 100	89.5 x 198	0.8	B32344D4152A000	4
MKP400-D-16.7	16.7	24.1	20.0	28.9	3 · 111	89.5 x 198	0.8	B32344D4201A000	4
MKP400-D-20.0	20.0	28.9	24.0	34.7	3 · 133	89.5 x 273	1.1	B32344D4202A000	4
MKP400-D-25.0	25.0	36.1	–	–	3 · 166	89.5 x 273	1.5	B32344D4252A000	4
Rated voltage 415 VAC, 50/60 Hz, delta connection									
MKP415-D-1.0	1.0	1.4	1.2	1.6	3 · 6	53 x 114	0.3	B32343C4012A010	12
MKP415-D-1.5	1.5	2.1	1.8	2.4	3 · 9	53 x 114	0.3	B32343C4012A510	12
MKP415-D-2.0	2.0	2.8	2.4	3.4	3 · 12	53 x 114	0.4	B32343C4022A010	12
MKP415-D-2.5	2.5	3.5	3.0	4.2	3 · 15	63.5 x 129	0.4	B32343C4022A510	12
MKP415-D-5.0	5.0	7.0	6.0	8.4	3 · 31	63.5 x 154	0.4	B32343C4052A010	12
MKP415-D-6.3	6.3	8.8	7.5	10.6	3 · 39	79.5 x 160	0.5	B32344D4071A510	6
MKP415-D-7.5	7.5	10.4	9.0	12.5	3 · 46	79.5 x 198	0.6	B32344D4072A510	6
MKP415-D-10.0	10.0	13.9	12.0	16.7	3 · 62	79.5 x 198	0.6	B32344D4102A010	6
MKP415-D-12.5	12.5	17.4	15.0	20.9	3 · 77	89.5 x 198	0.8	B32344D4122A510	4
MKP415-D-15.0	15.0	20.9	18.0	25.1	3 · 92	89.5 x 273	1.2	B32344D4152A010	4
MKP415-D-20.0	20.0	27.9	24.0	33.4	3 · 123	89.5 x 273	1.2	B32344D4202A010	4
MKP415-D-25.0	25.0	34.8	–	–	3 · 154	89.5 x 348	1.5	B32344D4252A010	4
Rated voltage 440 VAC, 50/60 Hz, delta connection									
MKP440-D-0.9	0.9	1.2	1.0	1.3	3 · 5	53 x 114	0.3	B32343C4011A040	12
MKP440-D-1.0	1.0	1.3	1.2	1.6	3 · 6	53 x 114	0.3	B32343C4012A040	12
MKP440-D-1.2	1.2	1.6	1.5	2.0	3 · 7	53 x 114	0.3	B32343C4011A540	12

Customized products available upon request. Minimum order quantity 200 pieces.

[1] Packing units for capacitors equal minimum order quantity.
Orders will be rounded up to packing unit or multiple thereof.

Please read the *Important notes* on page 10 and *Cautions* on page 11–13.

PhiCap PFC Capacitors

Resin (Polyurethane) impregnated ■ Stacked winding ■ Dual safety system

PhiCap

Three-phase capacitors

Type	50 Hz		60 Hz		C_R	d x h	Weight	Ordering code	Packing unit[1]
	Output kvar	I_R A	Output kvar	I_R A	µF	mm	kg		
Rated voltage 440 VAC, 50/60 Hz, delta connection									
MKP440-D-1.5	1.5	2.0	1.8	2.3	3 · 8	53 x 114	0.3	B32343C4012A540	12
MKP440-D-2.1	2.1	2.7	2.5	3.3	3 · 11	53 x 114	0.4	B32343C4021A540	12
MKP440-D-2.5	2.5	3.3	3.0	3.9	3 · 13	63.5 x 129	0.3	B32343C4022A540	12
MKP440-D-4.2	4.2	5.5	5.0	6.6	3 · 23	63.5 x 129	0.4	B32343C4051A040	12
MKP440-D-5.0	5.0	6.5	6.0	7.8	3 · 27	63.5 x 154	0.5	B32343C4052A040	12
MKP440-D-6.3	6.3	8.3	7.5	9.9	3 · 34	79.5 x 160	0.5	B32344D4071A540	6
MKP440-D-7.5	7.5	9.9	9.0	11.8	3 · 41	79.5 x 160	0.5	B32344D4072A540	6
MKP440-D-8.3	8.3	10.9	10.0	13.1	3 · 46	79.5 x 198	0.6	B32344D4101A040	6
MKP440-D-10.0	10.0	13.1	12.0	15.8	3 · 55	79.5 x 198	0.6	B32344D4102A040	6
MKP440-D-10.4	10.4	13.7	12.5	16.4	3 · 57	79.5 x 198	0.6	B32344D4121A540	6
MKP440-D-12.5	12.5	16.4	15.0	19.7	3 · 69	89.5 x 198	0.8	B32344D4151A040	4
MKP440-D-15.0	15.0	19.7	18.0	23.6	3 · 82	89.5 x 273	1.2	B32344D4152A040	4
MKP440-D-16.7	16.7	21.9	20.0	26.3	3 · 92	89.5 x 273	1.2	B32344D4201A040	4
MKP440-D-20.8	20.8	27.3	25.0	32.8	3 · 114	89.5 x 273	1.2	B32344D4251A040	4
MKP440-D-25.0	25.0	32.8	–	–	3 · 138	89.5 x 348	1.5	B32344D4252A040	4
MKP440-D-28.0	28.0	36.8	–	–	3 · 154	89.5 x 348	1.5	B32344D4282A040	4
Rated voltage 480 VAC, 50/60 Hz, delta connection									
MKP480-D-1.5	1.5	1.8	1.8	2.2	3 · 7	63.5 x 129	0.4	B32343C4012A580	12
MKP480-D-2.0	2.0	2.4	2.4	2.9	3 · 9	63.5 x 129	0.4	B32343C4022A080	12
MKP480-D-2.5	2.5	3.0	3.0	3.6	3 · 11	63.5 x 129	0.4	B32343C4022A580	12
MKP480-D-4.2	4.2	5.1	5.0	6.1	3 · 19	63.5 x 154	0.5	B32343C4051A080	6
MKP480-D-5.0	5.0	6.0	6.0	7.2	3 · 23	79.5 x 160	0.5	B32344D4052A080	6
MKP480-D-6.3	6.3	7.6	7.6	9.1	3 · 29	79.5 x 160	0.5	B32344D4071A580	6
MKP480-D-7.5	7.5	9.0	9.0	10.8	3 · 35	79.5 x 198	0.6	B32344D4072A580	6
MKP480-D-8.3	8.3	10.0	10.0	12.0	3 · 38	79.5 x 198	0.6	B32344D4101A080	6
MKP480-D-10.4	10.4	12.5	12.5	15.0	3 · 48	89.5 x 198	0.8	B32344D4121A580	4
MKP480-D-12.5	12.5	15.1	15.0	18.1	3 · 58	89.5 x 198	0.8	B32344D4151A080	4
MKP480-D-15.0	15.0	18.1	18.0	21.7	3 · 69	89.5 x 273	1.2	B32344D4152A080	4
MKP480-D-16.7	16.7	20.1	20.0	24.1	3 · 77	89.5 x 273	1.2	B32344D4162A780	4
MKP480-D-20.8	20.8	25.0	25.0	30.1	3 · 96	89.5 x 273	1.2	B32344D4202A080	4
MKP480-D-25.0	25.0	30.1	30.0	36.1	3 · 115	89.5 x 348	1.5	B32344D4252A080	4
MKP480-D-30.0	30.0	36.1	–	–	3 · 138	89.5 x 348	1.5	B32344D4302A080	4
Rated voltage 525 VAC, 50/60 Hz, delta connection									
MKP525-D-1.0	1.0	1.1	1.2	1.3	3 · 4	53 x 114	0.3	B32343C5012A020	12
MKP525-D-1.5	1.5	1.6	1.8	2.0	3 · 6	53 x 114	0.3	B32343C5012A520	12
MKP525-D-2.0	2.0	2.2	2.4	2.6	3 · 8	63.5 x 129	0.4	B32343C5022A020	12
MKP525-D-2.5	2.5	2.7	2.7	3.0	3 · 9	63.5 x 129	0.4	B32343C5022A520	12
MKP525-D-5.0	5.0	5.5	6.0	6.6	3 · 19	79.5 x 160	0.3	B32344D5061A020	6
MKP525-D-6.3	6.3	6.9	7.6	8.3	3 · 24	79.5 x 160	0.5	B32344D5071A520	6
MKP525-D-8.3	8.3	9.1	10.0	11.0	3 · 32	79.5 x 198	0.6	B32344D5101A020	6
MKP525-D-10.4	10.4	11.5	12.5	13.7	3 · 40	89.5 x 198	0.8	B32344D5121A520	4
MKP525-D-12.5	12.5	13.8	15.0	16.5	3 · 48	89.5 x 273	1.2	B32344D5151A020	4
MKP525-D-16.6	16.6	18.3	20.0	21.9	3 · 64	89.5 x 273	1.2	B32344D5201A020	4
MKP525-D-20.8	20.8	22.9	25.0	27.5	3 · 80	89.5 x 348	1.5	B32344D5202A020	4
MKP525-D-25.0	25.0	27.5	30.0	33.0	3 · 96	89.5 x 348	1.5	B32344D5252A020	4

Customized products available upon request. Minimum order quantity 200 pieces.

[1] Packing units for capacitors equal minimum order quantity.
Orders will be rounded up to packing unit or multiple thereof.

Dimensional drawings: three-phase capacitors

Capacitor B32343 series

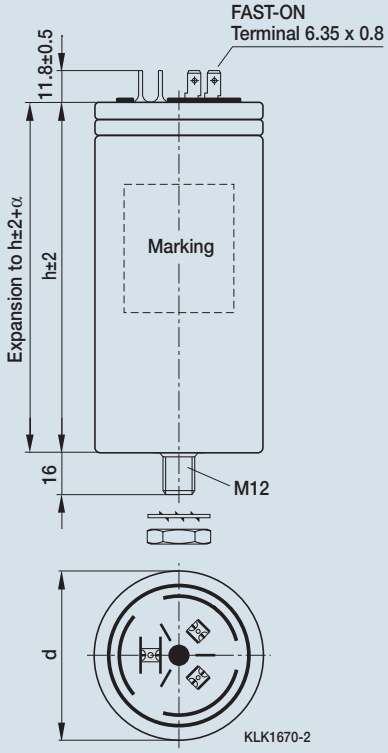

Creepage distance	10.5 mm (ø 53) 10.0 mm (ø 63.5)
Clearance	13.0 mm (ø 53) 16.5 mm (ø 63.5)
Diameter (ø)	53 mm 63.5 mm
Expansion α	max. 12 mm

Mounting

	M12 (ø 63.5 mm)	M8 (ø 53 mm)
Torque	T=10 Nm	T=4 Nm
Toothed washer	J12.5 DIN 6797	J8.0 DIN 6797
Hex nut	BM12 DIN 439	BM 8 DIN 439

Capacitor B32344 series

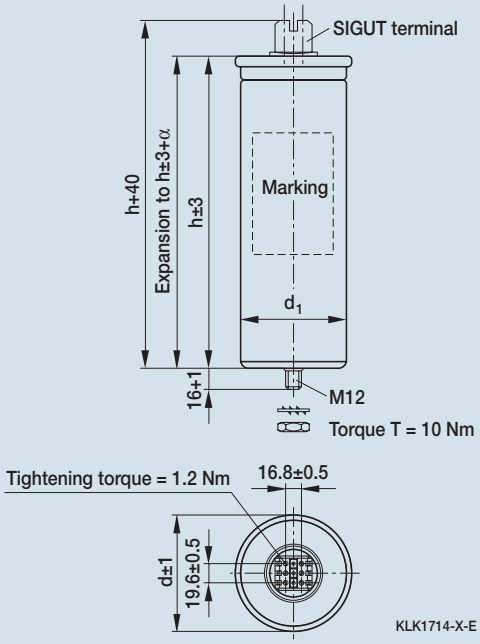

Creepage distance	9.6 mm
Clearance	12.7 mm
Diameter d (ø)	79.5 mm / 89.5 mm
Diameter d1 (ø)	75.0 mm / 85.0 mm
Expansion α	max. 13 mm

Mounting

	M12	M5
Torque	T=10 Nm	T=2.5 Nm
Toothed washer	J12.5 DIN 6797	
Hex nut	BM12 DIN 439	

PhiCap PFC Capacitors

Resin (Polyurethane) impregnated ■ Stacked winding ■ Dual safety system

PhiCap

Single-phase capacitors

Type	50 Hz		60 Hz		C_R	d x h	Weight	Ordering code	Packing unit[1]
	Output kvar	I_R A	Output kvar	I_R A	µF	mm	kg		
Rated voltage 230 VAC, 50/60 Hz									
MKP230-I-0.8	0.8	3.6	1.0	4.3	50	63.5 x 105	0.30	B32340C2002A830	12
MKP230-I-1.7	1.7	7.2	2.0	8.7	100	63.5 x 142	0.40	B32340C2012A730	12
MKP230-I-2.5	2.5	10.9	3.0	13.1	150	63.5 x 142	0.50	B32340C2022A530	12
Rated voltage 400 VAC, 50/60 Hz									
MKP400-I-0.8	0.8	2.0	1.0	2.3	15	63.5 x 68	0.30	B32340C3001A880	12
MKP400-I-1.7	1.7	4.2	2.0	5.0	33	63.5 x 68	0.30	B32340C4012A700	12
MKP400-I-2.5	2.5	6.3	3.0	7.5	50	63.5 x 105	0.40	B32340C4022A500	12
MKP400-I-3.3	3.3	8.4	4.0	10.0	66	63.5 x 105	0.40	B32340C4032A300	12
MKP400-I-4.2	4.2	10.4	5.0	12.5	83	63.5 x 142	0.40	B32340C4051A000	12
MKP400-I-5.0	5.0	12.4	6.0	15.0	99	63.5 x 142	0.50	B32340C4052A000	12
Rated voltage 415 VAC, 50/60 Hz									
MKP415-I-0.8	0.8	2.0	1.0	2.4	15	63.5 x 68	0.35	B32340C4082A310	12
MKP415-I-1.7	1.7	4.0	2.0	4.8	31	63.5 x 105	0.45	B32340C4012A710	12
MKP415-I-2.5	2.5	6.0	3.0	7.2	46	63.5 x 105	0.50	B32340C4022A510	12
MKP415-I-3.3	3.3	8.0	4.0	9.7	62	63.5 x 142	0.50	B32340C4032A310	12
MKP415-I-5.0	5.0	12.0	6.0	14.5	91	63.5 x 142	0.60	B32340C4052A010	12
Rated voltage 440 VAC, 50/60 Hz									
MKP440-I-0.7	0.7	1.6	0.8	1.9	11	63.5 x 68	0.30	B32340C4001A840	12
MKP440-I-1.4	1.4	3.2	1.7	3.8	23	63.5 x 68	0.30	B32340C4011A740	12
MKP440-I-2.1	2.1	4.7	2.5	5.7	34	63.5 x 105	0.40	B32340C4021A540	12
MKP440-I-2.8	2.8	6.4	3.3	7.6	46	63.5 x 105	0.40	B32340C4031A340	12
MKP440-I-3.3	3.3	7.6	4.0	9.1	55	63.5 x 142	0.50	B32340C4032A340	12
MKP440-I-4.2	4.2	9.5	5.0	11.4	68	63.5 x 142	0.50	B32340C4051A040	12
MKP440-I-5.0	5.0	11.4	6.0	13.6	82	63.5 x 142	0.60	B32340C4052A040	12
Rated voltage 480 VAC, 50/60 Hz									
MKP480-I-0.7	0.7	1.5	0.8	1.7	10	63.5 x 105	0.30	B32340C4001A880	12
MKP480-I-1.4	1.4	2.9	1.7	3.5	19	63.5 x 105	0.30	B32340C4011A780	12
MKP480-I-2.1	2.1	4.3	2.5	5.2	29	63.5 x 105	0.50	B32340C4021A580	12
MKP480-I-2.8	2.8	5.8	3.3	6.9	38	63.5 x 142	0.50	B32340C4031A380	12
Rated voltage 525 VAC, 50/60 Hz									
MKP525-I-1.4	1.4	2.6	1.7	3.1	15	63.5 x 105	0.30	B32340C5011A730	12
MKP525-I-2.8	2.8	5.2	3.3	6.2	31	63.5 x 142	0.50	B32340C5031A330	12
MKP525-I-3.3	3.3	6.3	4.0	7.6	38	63.5 x 142	0.60	B32340C5032A320	12
MKP525-I-4.2	4.2	8.0	5.0	9.5	48	63.5 x 142	0.70	B32340C5051A020	12

Customized products available upon request. Minimum order quantity 200 pieces.

[1] Packing units for capacitors equal minimum order quantity.
Orders will be rounded up to packing unit or multiple thereof.

Dimensional drawings: single-phase capacitors

Capacitor B32340 series

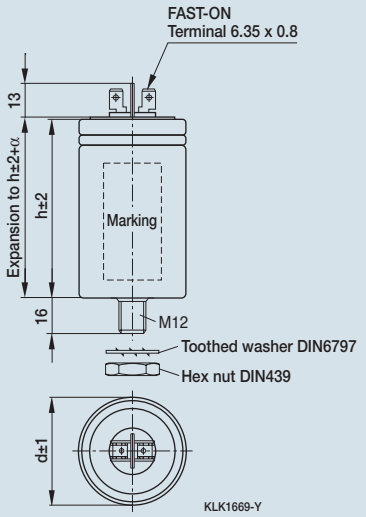

Creepage distance	10.0 mm
Clearance	16.5 mm
Diameter (ø)	63.5 mm
Expansion α	max. 12 mm
Mounting	M12
Torque	T=10 Nm
Toothed washer	J12.5 DIN 6797
Hex nut	BM12 DIN 439

Discharge resistors for B32340- and B32343-types

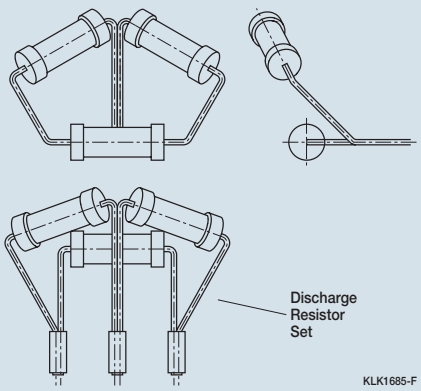

Protective cover for terminal

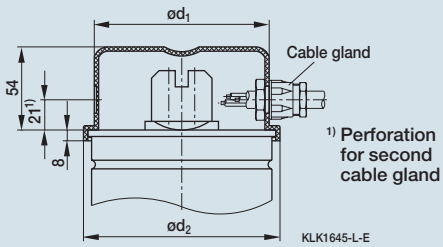

Ø in mm	Ordering code
53	B44066K0530A000*
63.5	B44066K0635A000*
79.5	B44066K0795A000
89.5	B44066K0895A000

* For B32340 and B32343 types (diameter 53 and 63.5 mm), terminal covers with cable entry on top

Discharge resistors pre-mounted for B32344D

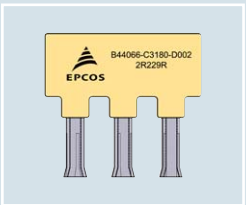

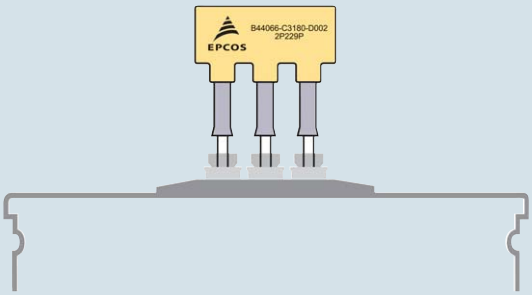

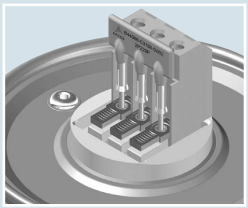

MKV PFC Capacitors

For high ambient temperatures (up to +70 °C) ■ High overcurrent capability

MKV

General

The winding element of the MKV capacitor consists of a dielectric of polypropylene film and an electrode of double-sided metalized paper. This winding construction achieves low losses and a high pulse-current withstand capability. Oil is used for impregnation of the capacitor. The oil impregnation (due to the paper film) enables good heat dissipation from the winding element to the aluminum can's surface, thus preventing hot spots in the winding element.
The capacitor is designed to cover ambient temperatures of up to +70 °C max.

Applications

- Power factor correction to improve the power quality
  - Applications with high thermal loading
  - PFC systems dealing with harmonic loads
- AC applications in industrial electronics, e.g. high dv/dt
- Tuned harmonic filter

Features

Electrical

- Long life expectancy (up to 150 000 h)
- Maximum pulse current withstand capability (up to 300 · I_R)

Mechanical and maintenance

- Easy installation and connection
- Maintenance-free

Safety

- Self-healing
- Overpressure disconnector

Three-phase capacitors

Type	50 Hz		60 Hz		$I_{max\ RMS}$	C_R	d x h	Weight	Ordering code	Packing unit[1]
	Output kvar	I_R A	Output kvar	I_R A	A	µF	mm	kg		
Rated voltage 400 VAC, 50/60 Hz, delta connection										
MKV400-D-5-01	5.0	7.0	6.0	8.5	40	3 · 33	79.2 x 248	1.3	B25836B4996A305	2
MKV400-D-10-01	10.0	14.0	12.0	17.0	40	3 · 66	121.6 x 248	2.9	B25836B4197A305	2
MKV400-D-12.5-01	12.5	18.0	15.0	19.7	40	3 · 83	121.6 x 248	3.0	B25836B4247A305	2
MKV400-D-15-01	15.0	22.0	18.0	26.0	40	3 · 99	121.6 x 248	3.1	B25836B3297A305	2
Rated voltage 525 VAC, 50/60 Hz, delta connection										
MKV525-D-10-01	10.0	11.0	12.0	13.2	40	3 · 38	99.3 x 248	2.1	B25836B5117A305	2
MKV525-D-12.5-01	12.5	14.0	15.0	17.0	40	3 · 48	121.6 x 248	3.1	B25836B5147A305	2
Rated voltage 600 VAC, 50/60 Hz, delta connection										
MKV600-D-10.4-01	10.4	10.0	12.5	12.0	40	3 · 30	121.6 x 248	3.1	B25836B6926A305	2
Rated voltage 690 VAC, 50/60 Hz, delta connection										
MKV690-D-12.5-01	12.5	11.0	15.0	13.2	40	3 · 27	121.6 x 248	3.1	B25836B6836A305	2

[1] Packing units for capacitors equal minimum order quantity.
Orders will be rounded up to packing unit or multiple thereof.

MKV PFC Capacitors

For high ambient temperatures (up to +70 °C) ■ High overcurrent capability

MKV

Technical data and limit values		
Standards IEC 60831-1+2, EN 60831-1+2, VDE 560-46+47, UL 810 5th edition		
Overvoltage	V_{max}	V_R + 10% (up to 8 h daily) / V_R + 15% (up to 30 min daily) / V_R + 20% (up to 5 min daily) / V_R + 30% (up to 1 min daily)
Overcurrent	I_{max}	up to 1.8 · I_R (including combined effects of harmonics, overvoltages and capacitance tolerance)
Inrush current	I_S	up to 300 · I_R
Losses: **– Dielectric** **– Total***		 < 0.2 W/kvar < 0.45 W/kvar
Rated frequency	f	50/60 Hz
Capacitance tolerance		–5%/+10%
Test voltage, terminal/terminal	V_{TT}	2.15 · V_{R1}, AC, 10 s
Test voltage, terminal/case	V_{TC}	$V_R \leq 660$ V: 3000 VAC, 10 s $V_R \leq 660$ V: 6000 VAC, 10 s
Mean life expectancy	$t_{LD(Co)}$	up to 150000 h
Ambient temperature		max. temp. 70 °C; max. mean 24 h = 55 °C; max. mean 1 year = 45 °C; lowest temperature = –25 °C
Cooling		natural or forced
Humidity	H_{rel}	max. 95%
Altitude		max. 4000 m above sea level
Mounting position		upright
Mounting and grounding		threaded M12 stud on bottom of case
Safety		overpressure disconnector, self-healing
Discharge resistors		discharge module included
Case		extruded aluminum can
Enclosure		IP00, indoor mounting
Dielectric		polypropylene film with paper as electrode carrier
Impregnation		oil
Terminals		SIGUT terminal strip with electric shock protection (IP20), (VDE 0106 part 100), max. 16 mm² cable cross-section, max. current 50 A
Number of switching operations		max. 5000 switchings per year according to IEC 60831-1+/2

* Without discharge resistor

PFC Controllers BR604 and BR6000 Series

Intelligent ■ User-friendly ■ Cost-effective

General

Controllers for power factor correction in low-voltage systems measure the actual power factor and connect or disconnect capacitors to achieve a certain desired value (cos φ).

The single-phase electronic measuring system detects the reactive and active component of the network through the current and voltage path. From this it calculates the phase shift between the fundamentals of current and voltage and compares this with the set target power factor.

If there are deviations of the power factor, capacitor stages are switched in and out by the controller. The contactor control logic is optimized, so that the desired cos φ is achieved with minimum switching operations, thus ensuring an optimized life cycle of the capacitor bank.

The innovative PFC controllers BR604 (4 stages) and BR6000 (6 and 12 stages) offer very intelligent control behavior and are extremely user-friendly thanks to menu-driven handling (plain language). The multifunctional display makes installation, handling and maintenance as easy as possible.

BR604

BR6000

Features

- Display
  - Large and multifunctional LCD (2 x 16 characters)
  - Graphic and alphanumeric
  - LCD illumination*
- Intelligent control
- Menu-driven handling (plain language)
- Self-optimizing control capability
- Recall function of recorded values
- Four-quadrant operation (e.g. stand-by generator)
- Large measuring voltage range*
- Powerful alarm output*
- Display of numerous of system parameters
  - System voltage (VAC)
  - Reactive power (kvar)
  - Active power (kW)
  - Frequency*
  - THD-V, THD-I*
  - Individual harmonics up to 19th*
  - Monitoring of individual capacitor currents*
  - Apparent power (kVA)
  - Apparent current (A)
  - Temperature (°C)*
  - Real-time cos φ
  - Target cos φ
  - kvar value to target cos φ
- Alarm output*
  - Insufficient compensation
  - Overcompensation
  - Undercurrent
  - Overcurrent
  - Overtemperature
  - Harmonics exceeded
  - Threshold value programmable
  - Internal error storage
  - Programming of 2nd signal relay random
- Recall recorded values
  - Number of contactor switching operations*
  - Maximum voltage, U (V_{max})
  - Maximum reactive power, Q (kvar)
  - Maximum value of harmonic*
  - Maximum active power, P (kW)
  - Maximum apparent power, S (kVA)
  - Maximum temperature (°C)*
  - Operation time of all capacitors*
- Dynamic PFC (transistor output)*
  - Thyristor switching

* Only for BR6000 series

PFC Controllers BR604 and BR6000 Series

Intelligent ■ User-friendly ■ Cost-effective

Technical data	BR6000 series	BR604 series
Weight	1 kg	0.5 kg
Case	panel-mounted instrument, 144 x 144 x 60 mm (cut out 138 x 138 mm)	panel-mounted instrument, 100 x 100 x 40 mm (cut out 92 x 92 mm)
Ambient conditions		
Overvoltage class	III	III
Pollution degree	2	2
Operating temperature	–10 °C ... +70 °C	–10 °C ... +70 °C
Storage temperature	–20 °C ... +75 °C	–20 °C ... +75 °C
Sensitivity to interference (industrial areas)	EN 55082-2.1995	EN 55082-2.1995
Spurious radiation (residential areas)	EN 55011 10.1997	EN 55011 10.1997
Safety guidelines	EN 61010-1 03.1994 + A2 05.1996 / IEC 1010-1 1990 + A1 1992	EN 61010-1 03.1994 + A2 05.1996 / IEC 1010-1 1990 + A1 1992
Mounting position	any	any
Humidity class	15% to 95% without dew	15% to 95% without dew
Protection class Front plate Rear	 IP54 according to IEC 529 / DIN 40050 IP20 according to IEC 529 / DIN 40050	 IP54 according to IEC 529 / DIN 40050 IP20 according to IEC 529 / DIN 40050
Operation		
Supply voltage	230 VAC, 50 and 60 Hz power lines	230 VAC, 50 and 60 Hz power lines
Target cos φ	0.8 ind.–0.8 cap.	0.8 ind.–0.8 cap.
Switching and discharge time range	1 – 1 200 seconds	1 – 255 seconds
Number of control series	20 series preset + control series editor for free programming	23 series preset
Control modes	series switching (LIFO), circular switching (FIFO), self-optimized intelligent control mode	series switching (LIFO), circular switching (FIFO), self-optimized intelligent control mode
Measurement		
Measurement voltage range	30 ... 300 VAC phase to neutral (i.e. 50 ... 525 V phase to phase)	= supply voltage: 230 VAC (L-N)
Fundamental frequency	50 and 60 Hz	50 and 60 Hz
Measurement current (CT)	x/1 and x/5 Ampere possible	x/1 and x/5 Ampere possible
Minimum operating current	40 mA	40 mA
Maximum current	5.3 A (sinusoidal)	5.3 A (sinusoidal)
Zero voltage release	< 15 ms	< 15 ms
Switching outputs		
Relay outputs Number of relays Switching voltage / power Expected mechanical life Expected electrical life	 6 and 12 stages available max. 250 VAC, max. 1 000 W > 30 x 10^6 switching operations > 5 x 10^6 switching operations (load = 200 VA, cos φ = 0.4)	 4 stages available max. 250 VAC, max. 1 000 W > 30 x 10^6 switching operations > 5 x 10^6 switching operations (load = 200 VA, cos φ = 0.4)
Alarm relay	potential-free contact (6 parameters)	no

Please read the *Important notes* on page 10 and *Cautions* on page 11–13.

PFC Controllers BR604 and BR6000 Series

Intelligent ■ User-friendly ■ Cost-effective

BR6000T for dynamic power factor correction

The dynamic power factor controller BR6000T represents the follow-on development of the BR6000 series with innovative ideas and a multitude of functions.

It has been especially designed to control thyristor modules for direct switching of power capacitors for power factor correction (for example TSM-LC or similar). By using a very fast type of processor, it has been possible to obtain extremely short switching cycles, which can be used for dynamic power factor correction.

In addition to a switching time of < 40 ms, the intelligent control principle provides an extremely fast tuning time by simultaneous switching of several stages.

Individual parameters that can be edited allow optimized adjustment to different thyristor modules.

Another innovation is the possibility of a simple coupling of two PFC controllers with one another (for example cascading in case of two systems with two inputs and one coupling switch). This is possible without interface option.

Accessories: adapter for PFC controller BR6000

This adapter is used to align the PFC controller BR6000 to grids without neutral conductor. To achieve this, the input of the adapter is connected to the 3 phases of the grid, and the output is connected to the measuring voltage input of the controller.

The voltage at the measuring input must not exceed 525 V. At output "1/2 L1" half measuring voltage L-N is disposable.

Characteristics	
Design	compact form, all connections as screw type clamp
Mounting	snap on top hat rail
Technical data Input voltage	grid without neutral max. 3 x 525 V
Output voltage 1	L1-N
Output voltage 2	1/2 L1-N (to use this output, a V-transformer ratio of 2 has to be programmed on the BR6000)
Protection	necessary external according to cable cross-section
Max. ambient temperature	–20 ... +55 °C
Dimensions	height 76 mm, width 45 mm, depth 110 mm

Adapter BR6000

Ordering codes

Type	Voltage 50/60 Hz	Output Relay	Output Transistor	Alarm output	Switchover target cos φ 1/2	Interface	Ordering code	Packing unit
BR604-R4	230	4	–	no	no	no	B44066R6004E230	24
BR6000-R6	230	6	–	yes	no	no	B44066R6006E230	24
BR6000-T6	230	–	6	yes	no	no	B44066R6106E230	24
BR6000-R12	230	12	–	yes	no	no	B44066R6012E230	24
BR6000-T12	230	–	12	yes	no	no	B44066R6112E230	24
BR6000-R12/F	230	12	–	yes	yes	no	B44066R6212E230	24
BR6000-R12/S232*	230	12	–	yes	yes	RS232	B44066R6312E230	24
BR6000-R12/S485	230	12	–	yes	yes	RS485	B44066R6412E230	24
BR6000 Adapter							B44066R9999E230	

* Including Windows software

⚠ Cautions:
1. Discharge time: Make sure that discharge time set in controller matches capacitor discharge time. See page 12.
2. Number of switchings: LV PFC capacitors according to standard IEC 60831 are designed for up to 5 000 switching operations. Make sure that 5 000 switching operations per year are not exceeded.
3. Controller hunting must be avoided at any case!

PFC controller BR604

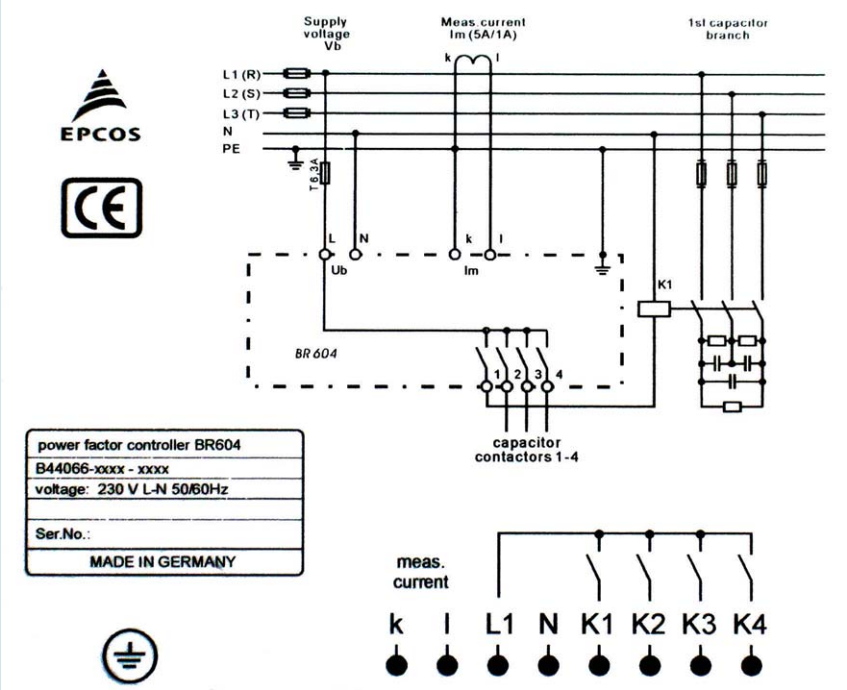

PFC controller BR6000

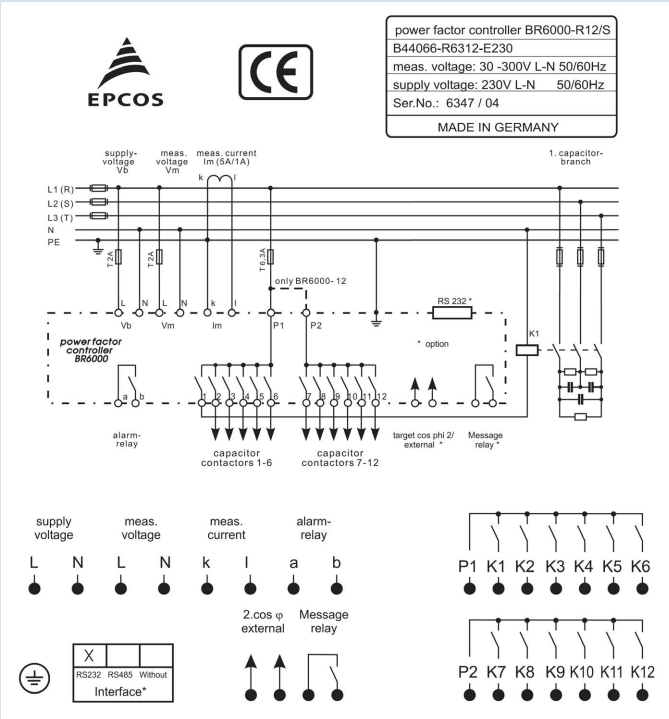

Capacitor Contactors

Specially designed for damping of inrush current in LV PFC systems

Features

- Excellent damping of inrush current
- Improved power quality (e.g. avoidance of voltage sags)
- Longer useful life of main contacts of capacitor contactor
- Soft switching of capacitor and thus longer useful life
- Enhanced mean life expectancy of PFC system
- Reduced ohmic losses
- Leading contacts with wiper function
- Tamper-proof and protected resistors
- Easy access for cable connection

Capacitor contactors for switching detuned and conventional three-phase capacitors

When a capacitor is switched to an AC voltage, the result is a resonant circuit damped to a greater or lesser degree. In addition to the rated current, the capacitor accepts a transient current that is a multiple of (as many as 200 times) its rated current. Fast switching, low-bounce contactors should be used.

Because of the leading contacts, the inrush current spikes (reverse charging operations) are limited or damped by resistance wires. These current spikes would lead to welding of the contactor's main contacts and they are also harmful for the capacitors. Reduction of the inrush currents also avoids transients and voltage sags.

Leading contacts with a wiper function are used in these capacitor contactors, i.e. each leading contact is linked to the contactor yoke by a permanent magnet. The leading contacts close before the main contacts and open when the main contacts are with certainty closed. This feature of the capacitor contactors guarantees effective, stable operation throughout useful life. The single controlled leading contacts also enhance resistance to soiling during operation.

The capacitor contactors are suitable for direct switching of low-inductance and low-loss capacitor banks (IEC 60831, VDE 0560) with or without detuning reactors.

They feature leading auxiliary switches and damping resistors to reduce peak inrush to < 70 · I_R (inrush current).

The capacitor contactors are weld-resistant up to a possible peak inrush current of 200 · I_R. The backup fuses gL (gG) should be scaled for 1.6 to 1.8 · I_R.

All capacitor contactors come with an auxiliary contact (normally open).

Capacitor Contactors

Specially designed for damping of inrush current in LV PFC systems

Technical data

Type Main contacts			B44066-…-J230/110 S1810	S2410	S3210	S5010	S6210	S7410
Rated insulation voltage V_I	V_{IS}	[VAC]	690[2]	690[2]	690[2]	690[2]	690[2]	690[2]
Admissible frequency of operation		1/h	120	120	120	120	120	80
Contact life		million operations	0.25	0.15	0.15	0.15	0.15	0.12
Cable cross-section solid or standard	⊘	[mm²]	1.5–6	2.5–25	2.5–25	4–50	4–50	4–50
flexible	⊘	[mm²]	1.5–4	2.5–16	2.5–16	10–35	10–35	10–35
flexible with multicore cable end	⊘	[mm²]	1.5–4	2.5–16	2.5–16	6–35	6–35	6–35
Cables per clamp			2	1	1	1	1	1
Operating range of magnet coils in multiples of control voltage	V_S		0.85–1.1	0.85–1.1	0.85–1.1	0.85–1.1	0.85–1.1	0.85–1.1
Auxiliary contacts[1] **Rated insulation voltage V_I**	V_{IS}	[VAC]	690[2]	690[2]	690[2]	690[2]	690[2]	690[2]
Rated current I_{th} at ambient temperature max. 40 °C		I_{coth} [A]	16	10	10	10	10	10
max. 60 °C		I_{coth} [A]	12	6	6	6	6	6
Utilization category AC15 220 to 240 V		I_{coth} [A]	12	3	3	3	3	3
380 to 440 V		I_{coth} [A]	4	2	2	2	2	2
Short circuit protection Highest fuse rating slow, gL (gG)		I_{coth} [A]	25	20	20	20	20	20
Auxiliary contacts[1]		NO/NC	1/0	1/0	1/0	1/0	1/0	1/0

IEC 947-4-1, IEC 947-5-1, EN 60947-4-1, EN 60947-5-1, VDE 0660

[1] Aux. contacts: NO = 1; NC = 0; for all contactor types
[2] Applies to networks with grounded star point, overvoltage category I to IV, pollution severity 3 (industrial standard), V_{imp} = 6 kV. Values for other conditions on request.

Main technical parameters

Capacitor power at ambient temperature, voltage, 50/60 Hz 380–400 V		415–440 V		660–690 V		Current max.		Weight	Ordering code	Packing unit
50 °C kvar	60 °C kvar	50 °C kvar	60 °C kvar	50 °C kvar	60 °C kvar	50 °C A	60 °C A	kg		
110 V coil										
0–12.5	0–12.5	0 – 13	0 – 13	0 – 20	0 – 20	18	18	0.34	B44066S1810J110	48
10–20	10–20	10.5–22	10.5–22	17 – 33	17 – 33	28	28	0.6	B44066S2410J110	40
10–25	10–25	10.5–27	10.5–27	17 – 41	17 – 41	36	36	0.6	B44066S3210J110	40
20–50	20–50	23 – 53	23 – 53	36 – 82	36 – 82	72	72	1.1	B44066S6210J110	15
20–75	20–60	23 – 75	23 – 64	36–120	36–100	105	87	1.1	B44066S7410J110	15
230 V coil										
0–12.5	0–12.5	0 – 13	0 – 13	0 – 20	0 – 20	18	18	0.34	B44066S1810J230	48
10–20	10–20	10.5–22	10.5–22	17 – 33	17 – 33	28	28	0.6	B44066S2410J230	40
10–25	10–25	10.5–27	10.5–27	17 – 41	17 – 41	36	36	0.6	B44066S3210J230	40
20–33.3	20–33.3	23 – 36	23 – 36	36 – 55	36 – 55	48	48	1.1	B44066S5010J230	15
20–50	20–50	23 – 53	23 – 53	36 – 82	36 – 82	72	72	1.1	B44066S6210J230	15
20–75	20–60	23 – 75	23 – 64	36–120	36–100	105	87	1.1	B44066S7410J230	15

Capacitor Contactors

Specially designed for damping of inrush current in LV PFC systems

Dimensional drawings

B44066S1810J230, B44066S1810J110

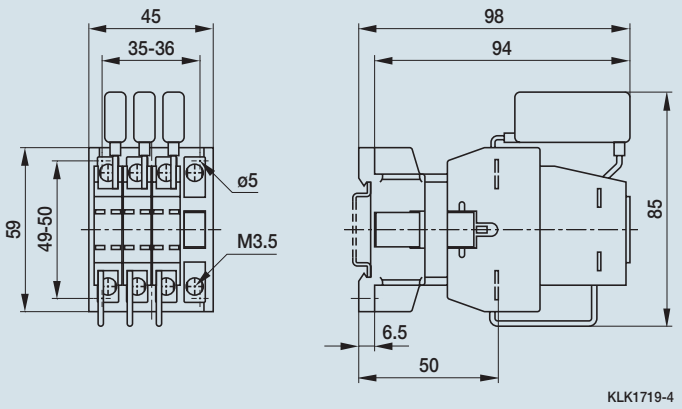

B44066S2410J230, B44066S3210J230, B44066S2410J110, B44066S3210J110

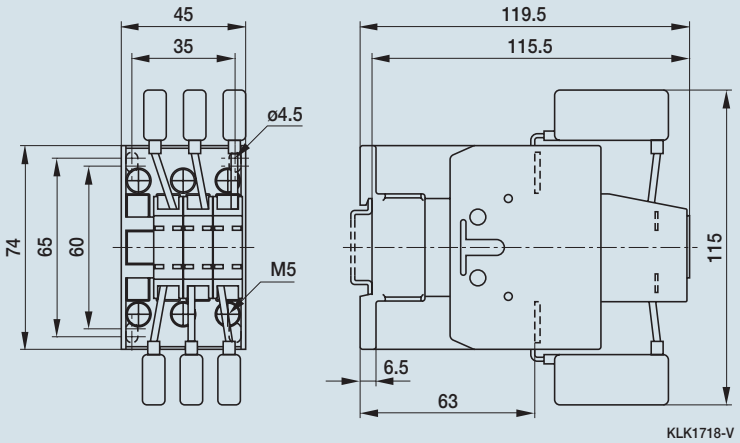

Capacitor Contactors

Specially designed for damping of inrush current in LV PFC systems

Dimensional drawings

B44066S5010J230, B44066S6210J230, B44066S7410J230, B44066S6210J110, B44066S7410J110

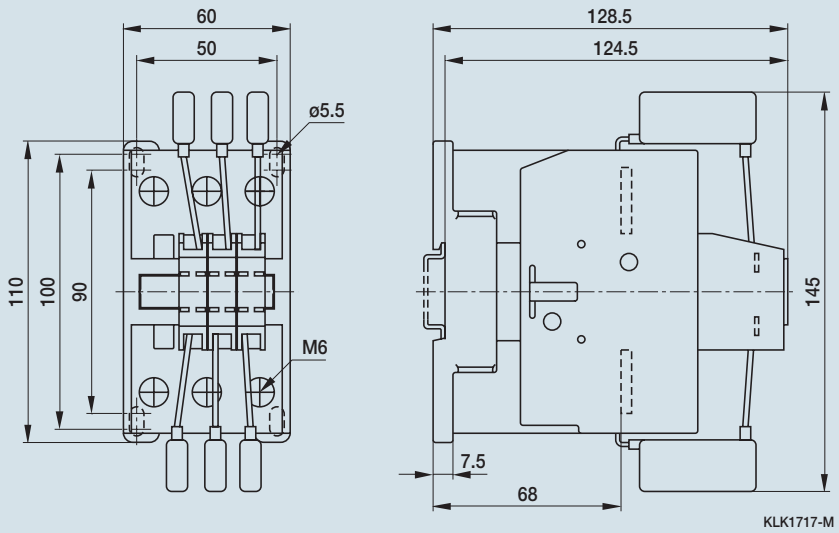

Connection diagramm B44066S1810J230 and B44066S1810J110 with wires on the bottom only

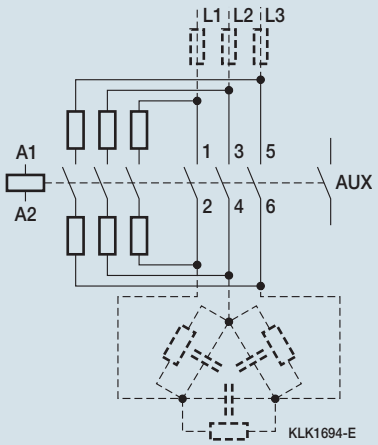

Antiresonance Harmonic Filter

Reactors

Features

- High harmonic loading capability
- Very low losses
- High linearity to avoid choke tilt
- Low noise
- Convenient mounting
- Long expected life time
- Temperature protection (NC contact)

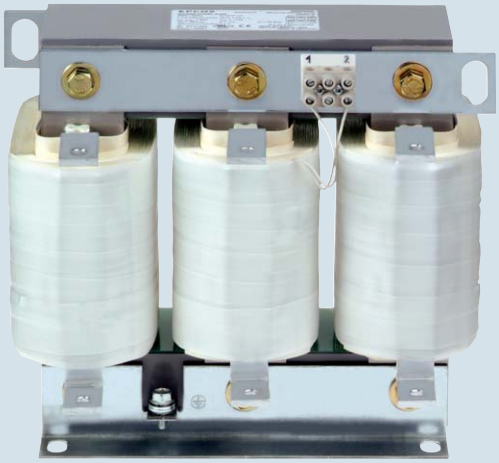

General

Electrical energy is a significant production factor for industry, and its efficient use should be a primary objective. Reducing the reactive current component by PFC correction helps to save energy.

The increasing use of modern power electronic apparatus (drives, uninterruptible power supplies, etc) produces nonlinear current, influences and loads the network with harmonics (line pollution).

The power factor correction or capacitance of the power capacitor forms a resonant circuit in conjunction with the feeding transformer. Experience shows that the self-resonant frequency of this circuit is typically between 250 and 500 Hz, i.e. in the region of the 5th and 7th harmonics.
Resonance can lead to the following undesirable effects:

– overloading of capacitors,
– overloading of transformers and transmission equipment,
– interference with metering and control systems, computers and electrical gear,
– resonance elevation, i.e. amplification of harmonics,
– voltage distortion.

These resonance phenomena can be avoided by connecting capacitors in series with filter reactors. Detuned systems are scaled so that the self-resonant frequency is below the lowest line harmonic. The detuned PFC system is purely inductive seen by harmonics above this frequency. For the 50 Hz line frequency, the detuned system acts purely capacitively, thus correcting the reactive power.

Technical data and limit values

Filter reactors	
Harmonics*	V_3 = 0.5% V_R (duty cycle = 100%) V_5 = 6.0% V_R (duty cycle = 100%) V_7 = 5.0% V_R (duty cycle = 100%) V_{11} = 3.5% V_R (duty cycle = 100%) V_{13} = 3.0% V_R (duty cycle = 100%)
Effective current	$I_{rms} = \sqrt{(I_1^2+I_3^2 \ldots I_{13}^2)}$
Fundamental current	$I_1 = 1.06 \cdot I_R$ (50 Hz or 60 Hz current of capacitor)
Temperature protection	microswitch (NC)

Three-phase filter reactors to EN 61558 / VDE 0532 / EN 60289

Frequency	50 Hz or 60 Hz
Voltage	400, 440, 480 V
Output	5 … 100 kvar
Detuning	5.67%, 7%, 14%
Cooling	natural
Ambient temperature	40 °C
Class of protection	I
Enclosure	IP00
Approval	c UL

* According to DIN ENV VV61000-2-2

Characteristics

Power kvar	Δ capacitance 3 · µF	Inductance mH	I_{rms} (I_{eff}) A	Losses* W	Weight kg	Drawing number	Terminal	Ordering code	Packing unit
Rated voltage V = 400 V, f = 50 Hz, p = 5.67% (f_r = 210 Hz) / Linearity: L ≥ 0.95 · L_R for current up to 2.08 · I1									
10	62	3.06	18.5	64	6.4	1c	10 mm² Kl.	B44066D5010S400	40
12.5	78	2.45	23.0	89	8.4	1d	10 mm² Kl.	B44066D5012S400	40
20	125	1.53	36.9	100	13	1e	10 mm² Kl.	B44066D5020S400	18
25	156	1.22	46.1	130	17	1f	10 mm² Kl.	B44066D5025S400	18
40	250	0.765	73.7	220	23	3b	M6 Al-flat	B44066D5040S400	18
50	312	0.612	92.1	290	31	3c	M6 Al-flat	B44066D5050S400	12
75	496	0.408	138.2	280	35	3c	M8 Al-flat	B44066D5075S400	12
100	625	0.306	183.8	390	47	3d	M8 Al-flat	B44066D5100S400	1
Rated voltage V = 400 V, f = 50 Hz, p = 7% (f_r = 189 Hz) / Linearity: L ≥ 0.95 · L_R for current up to 1.73 · I1									
10	61	3.83	16.4	73	5.9	1c	10 mm² Kl.	B44066D7010S400	40
12.5	77	3.07	20.5	87	8.1	1d	10 mm² Kl.	B44066D7012S400	40
20	123	1.92	32.7	100	12	1e	10 mm² Kl.	B44066D7020S400	40
25	154	1.53	41.0	120	16	1f	10 mm² Kl.	B44066D7025S400	18
40	246	0.958	65.6	210	23	3b	M6 Al-flat	B44066D7040S400	18
50	308	0.766	81.9	210	24	3b	M6 Al-flat	B44066D7050S400	18
75	462	0.511	122.9	267	32	3c	M8 Al-flat	B44066D7075S400	12
100	617	0.383	164.2	370	46	3d	M8 Al-flat	B44066D7100S400	1

* Total max. losses, considering max. specified overvoltage and harmonic currents

Characteristics

Power kvar	Δ capacitance 3 · µF	Inductance mH	I_{rms} (I_{eff}) A	Losses* W	Weight kg	Drawing number	Terminal	Ordering code	Packing unit
Rated voltage V = 400 V, f = 50 Hz, p = 14% (f_r = 135 Hz) / Linearity: L ≥ 0.95 · L_R for current up to 1.4 · I1									
10	57	8.23	15.4	87	9.4	1d	10 mm² Kl.	B44066D1410S400	40
12.5	71	6.63	19.2	100	12	1e	10 mm² Kl.	B44066D1412S400	18
20	114	4.14	30.8	120	18	1f	10 mm² Kl.	B44066D1420S400	18
25	142	3.32	38.5	210	25	2a	10 mm² Kl.	B44066D1425S400	18
40	228	2.07	61.6	220	32	3c	M6 Al-flat	B44066D1440S400	1
50	285	1.66	76.9	340	34	3c	M6 Al-flat	B44066D1450S400	1
75	427	1.1	115.4	330	52	3d	M8 Al-flat	B44066D1475S400	1
100	570	0.829	154	450	62	3e	M8 Al-flat	B44066D1499S400	1
Rated voltage V = 400 V, f = 60 Hz, p = 5.67% (f_r = 252 Hz) / Linearity: L ≥ 0.95 · L_R for current up to 2.08 · I1									
25	130	1.02	46.1	130	16	3a	M5 Al-flat	B44066D5025S401	18
50	260	0.51	92.2	230	26	3b	M6 Al-flat	B44066D5050S401	18
75	391	0.34	138.2	280	34	3c	M8 Al-flat	B44066D5075S401	12
100	521	0.255	184.3	370	48	3d	M8 Al-flat	B44066D5100S401	1
Rated voltage V = 400 V, f = 60 Hz, p = 7% (f_r = 227 Hz) / Linearity: L ≥ 0.95 · L_R for current up to 1.73 · I1									
25	128	1.29	41.0	103	16	3a	M5 Al-flat	B44066D7025S401	18
50	257	0.64	81.9	205	24	3b	M6 Al-flat	B44066D7050S401	18
75	385	0.426	122.9	245	33	3c	M8 Al-flat	B44066D7075S401	12
100	514	0.319	163.9	310	45	3d	M8 Al-flat	B44066D7100S401	1
Rated voltage V = 400 V, f = 60 Hz, p = 14% (f_r = 162 Hz) / Linearity: L ≥ 0.95 · L_R for current up to 1.4 · I1									
25	118	2.76	38.5	130	25	2a	10 mm² Kl.	B44066D1425S401	18
50	237	1.38	77.0	250	34	3c	M6 Al-flat	B44066D1450S401	12
75	356	0.92	115.4	340	49	3d	M8 Al-flat	B44066D1475S401	1
100	475	0.69	154.0	400	55	3d	M8 Al-flat	B44066D1499S401	1
Rated voltage V = 440 V, f = 50 Hz, p = 5.67% (f_r = 210 Hz) / Linearity: L ≥ 0.95 · L_R for current up to 2.08 · I1									
10	51	3.7	16.8	74	7	1c	10 mm² Kl.	B44066D5010S440	40
12.5	64	2.96	21.0	88	9	1d	10 mm² Kl.	B44066D5012S440	40
25	129	1.48	42.0	130	16.5	3a	M5 Al-flat	B44066D5025S440	18
50	258	0.74	83.8	230	25	3b	M6 Al-flat	B44066D5050S440	18
75	387	0.49	125.6	260	36	3c	M8 Al-flat	B44066D5075S440	1
100	517	0.37	168.0	340	50	3d	M8 Al-flat	B44066D5100S440	1
Rated voltage V = 440 V, f = 50 Hz, p = 7% (f_r = 189 Hz) / Linearity: L ≥ 0.95 · L_R for current up to 1.73 · I1									
10	50	4.64	14.9	71	6.5	1c	4 mm² Kl.	B44066D7010S440	40
12.5	63	3.71	18.7	85	8.5	1d	10 mm² Kl.	B44066D7012S440	40
25	127	1.86	37.2	105	17	3a	M5 Al-flat	B44066D7025S440	18
50	254	0.93	74.5	210	25	3b	M6 Al-flat	B44066D7050S440	18
75	382	0.618	112.2	250	35	3c	M8 Al-flat	B44066D7075S440	12
100	509	0.464	148.9	370	47	3d	M8 Al-flat	B44066D7100S440	1

* Total max. losses, considering max. specified overvoltage and harmonic currents

Antiresonance Harmonic Filter

Reactors

Reactors

Characteristics

Power kvar	Δ capacitance 3 · µF	Inductance mH	I_{rms} (I_{eff}) A	Losses* W	Weight kg	Drawing number	Terminal	Ordering code	Packing unit
Rated voltage V = 440 V, f = 50 Hz, p = 14% (f_r = 135 Hz) / Linearity: L ≥ 0.95 · L_R for current up to 1.4 · I1									
10	47	10	14.0	87	10	1d	4 mm² Kl.	B44066D1410S440	40
12.5	58	8.03	17.5	95	13	1e	10 mm² Kl.	B44066D1412S440	18
25	117	4	35.0	130	26	2a	10 mm² Kl.	B44066D1425S440	18
50	235	2.12	70.0	260	40	3c	M6 Cu-flat	B44066D1450S440	1
75	353	1.34	105.0	350	52	3d	M8 Al-flat	B44066D1475S440	1
100	471	1	140.0	440	66	3d	M8 Cu-flat	B44066D1499S440	1
Rated voltage V = 440 V, f = 60 Hz, p = 5.67% (f_r = 252 Hz) / Linearity: L ≥ 0.95 · L_R for current up to 2.08 · I1									
25	107	1.235	42.0	125	18	3a	M5 Al-flat	B44066D5025S441	18
50	215	0.617	83.8	210	25	3b	M6 Al-flat	B44066D5050S441	18
75	323	0.412	126.0	300	33	3c	M8 Al-flat	B44066D5075S441	12
100	431	0.309	167.4	400	47	3d	M8 Al-flat	B44066D5100S441	1
Rated voltage V = 440 V, f = 60 Hz, p = 7% (f_r = 227 Hz) / Linearity: L ≥ 0.95 · L_R for current up to 1.73 · I1									
25	106	1.55	37.2	100	16	3a	M5 Al-flat	B44066D7025S441	18
50	212	0.773	74.5	190	24	3b	M6 Al-flat	B44066D7050S441	18
75	318	0.515	111.8	235	34	3c	M8 Al-flat	B44066D7075S441	12
100	424	0.387	148.9	350	46	3d	M8 Al-flat	B44066D7100S441	1
Rated voltage V = 440 V, f = 60 Hz, p = 14% (f_r = 162 Hz) / Linearity: L ≥ 0.95 · L_R for current up to 1.4 · I1									
25	98	3.34	35.0	100	24	2a	10 mm² Kl.	B44066D1425S441	18
50	196	1.67	70.0	240	35	3c	M6 Al-flat	B44066D1450S441	12
75	294	1.11	105.0	360	48	3d	M8 Al-flat	B44066D1475S441	1
100	392	0.836	140.0	450	52	3d	M8 Al-flat	B44066D1499S441	1
Rated voltage V = 480 V, f = 60 Hz, p = 5.67% (f_r = 252 Hz) / Linearity: L ≥ 0.95 · L_R for current up to 2.08 · I1									
25	90	1.47	38.3	130	18	1f	10 mm² Kl.	B44066D5025S481	18
50	181	0.74	76.8	300	31	3c	M8 Al-flat	B44066D5050S481	12
75	271	0.49	115.1	230	33	3c	M8 Al-flat	B44066D5075S481	12
100	362	0.367	153.6	400	47	3d	M8 Al-flat	B44066D5100S481	1
Rated voltage V = 480 V, f = 60 Hz, p = 7% (f_r = 227 Hz) / Linearity: L ≥ 0.95 · L_R for current up to 1.73 · I1									
12.5	44	3.68	17.0	71	6.5	1c	4 mm² Kl.	B44066D7012S481	40
25	89	1.84	34.2	103	13.2	1e	10 mm² Kl.	B44066D7025S481	18
50	178	0.92	68.4	240	24.2	3b	M6 Al-flat	B44066D7050S481	18
75	267	0.61	102.4	270	32	3c	M8 Al-flat	B44066D7075S481	12
100	357	0.46	136.7	270	35	3c	M8 Al-flat	B44066D7100S481	1
Rated voltage V = 480 V, f = 60 Hz, p = 14% (f_r = 162 Hz) / Linearity: L ≥ 0.95 · L_R for current up to 1.4 · I1									
25	82	4.0	32.1	155	20	2a	10 mm² Kl.	B44066D1425S481	18
50	165	2.0	64.1	280	34	3c	M6 Al-flat	B44066D1450S481	12
75	247	1.33	96.2	350	48	3d	M8 Al-flat	B44066D1475S481	1
100	330	1.0	128.2	430	53	3d	M8 Al-flat	B44066D1499S481	1

* Total max. losses, considering max. specified overvoltage and harmonic currents

Cautions

During operation, all electrically active parts of this equipment such as windings, electronic components, leads, fuses and terminals carry a dangerous voltage which can lead to burns or electric shock.

Covers which protect these electrically active parts from being touched must not be opened or removed during operation.

Before any assembly or maintenance work is started, all installations and equipment must be disconnected from the power source.

Noncompliance with these instructions may lead to death, serious injury or major damage to equipment.

In order to exclude impermissible temperatures and thus overload of the insulation system, the following directions must additionally be observed:

1. Only those protective devices specified on the type plates, such as fuses and motor protection switches, may be used. It is mandatory to observe the set values specified for the motor protection switches. Any temperature-sensitive protective devices such as temperature switches and temperature sensors must be connected in accordance with the installation instructions.
2. High temperatures are permissible for the surfaces under rated operating conditions, and especially in the event of overload. Depending on the temperature class and type of loading, these may attain values of up to 260 °C and may also affect adjacent components which have been packed too densely.
3. The insertion position should be selected so that any cooling ducts present within the winding are arranged vertically and that the current of cooling air is not impeded by adjacent components, connecting leads etc.
4. The maximum voltage of the insulating system specified on the type plate must not be exceeded.

Noncompliance with these instructions may lead to considerable damage to equipment or fire due to impermissibly high temperatures.

Terminals

Connection type	Clamp size	Tightening torque Nm	Stripping length mm	Screwdriver point mm
Screw clamp	4 mm² cl.	0.5	11.0	0.8 x 4.0
	10 mm² cl.	2.5	13.0	1.2 x 6.5
Flat terminal	M5 Al-flat	3.0	–	–
	M6 Cu-flat	6.0	–	–
	M6 Al-flat	6.0	–	–
	M8 Cu-flat	13.0	–	–
	M8 Al-flat	13.0	–	–

Dimensional drawings

Drawing 1

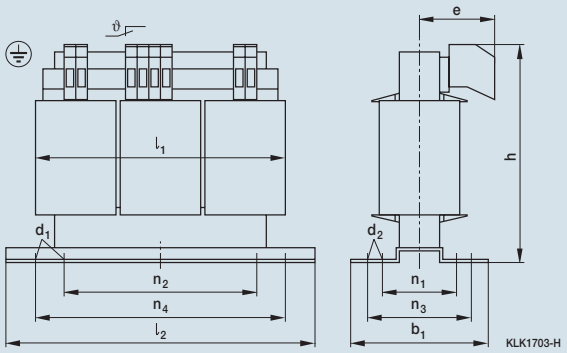

Drawing 2

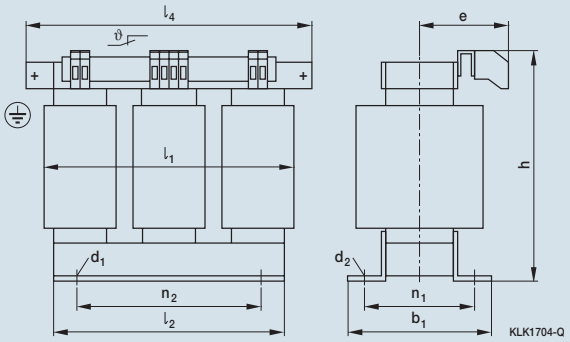

Drawing 3

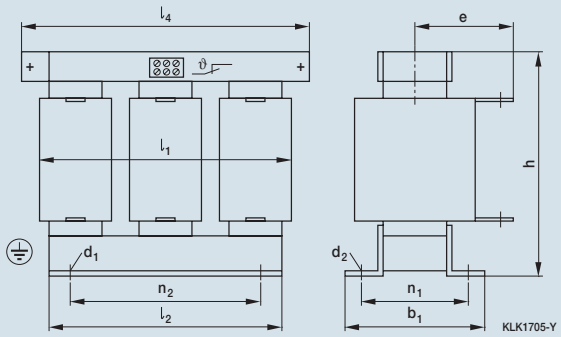

ϑ ≙ temperature micro switch (NC)

Drawing 1[1)]

	b1	d1	d2	d3	e max.	h max.	l1 max.	l2	n1	n2	n3	n4
a	73	5.8	11	M5	60	159	150	178	49	113	53	166
b	88	5.8	11	M5	67	159	150	178	64	113	68	166
c	99	7	13	M6	62	181	182	219	56	136	69	201
d	119	7	13	M6	72	181	182	219	76	136	89	201
e	107	7	13	M6	66	221	228	267	70	176	77	249
f	131	7	13	M6	79	221	228	267	94	176	101	249

Drawing 2[2)]

	b1	d1	d2	d3	e max.	h max.	l1 max.	l2	l4	n1	n2
a	162	10	18	M8	108	291	264	220	270	101	200

Drawing 3[2)]

a	115	7	12	M6	103	210	228	190	–	94	176
b	133	10	18	M8	121	248	264	220	270	101	200
c	148	10	18	M8	137	269	300	250	300	118	224
d	169	10	18	M8	142	321	360	300	350	138	264
e	174	12	18	M10	171	385	405	350	410	141	316

[1)] Insulation class B: 130 °C, [2)] Insulation class H: 180 °C

Discharge Reactor

General

The losses of discharge reactors are substantially lower than those of discharging resistors. This is very important in modern power factor correction systems with high power density because the useful life of PFC capacitors depends very much on ambient temperature.

Discharge reactors satisfy the requirement for permanently connected discharging devices and for a discharge time of a few seconds.

Because of its high AC resistance, the discharge reactor only generates extremely small losses during operation of the capacitor.

When the capacitors are turned off, there is very fast discharge over the low DC resistance.

Fast discharging allows a fast reswitching in automatic PFC equipment. However, max. 5 000 switching operations (according to IEC 60831) should be observed.

Features

- Fast discharge for fast reconnection of capacitors
- Reduced losses
- Shockproof case for rail mounting

Dimensional drawings

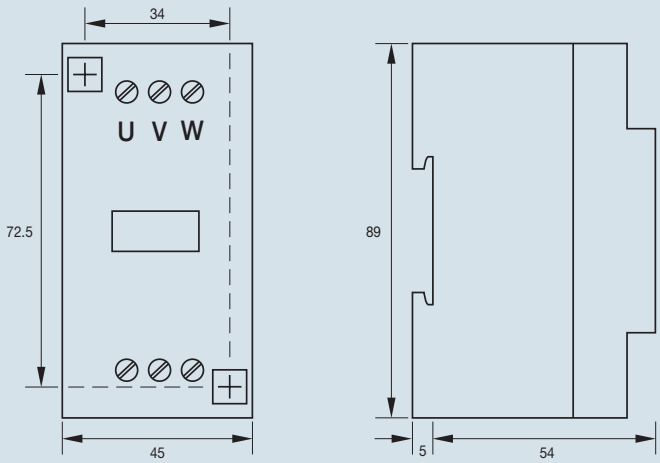

Discharge Reactor

Technical data

Ordering code		**B44066E9900S001**
Voltage	V_R	230 ... 525 V
Frequency	f	50 / 60 Hz
Internal configuration		2 windings in V arrangement
Resistance	R	4 900 Ω
Discharge time	t	230 V up to 25 kvar < 10 s / up to 50 kvar < 20 s / up to 100 kvar < 40 s 400 … 525 V up to 25 kvar < 5 s / up to 50 kvar < 10 s / up to 100 kvar < 20 s
Power loss	P_{LOSS}	< 1.8 W
Free-wheeling current	I	< 4.5 mA
Accepted discharge number		1 x / (minute and 100 kvar)
Insulation class	R_{INS}	T40/B
Cable diameter	ø	0.75 … 2 x 2.5 mm²
Terminals		fixing torque 0.5 Nm
Installation location		indoor
Ambient temperature		–25 … +55 °C
Cooling		natural
Dimensions		90 x 45 x 59 mm
Weight		0.5 kg

Dynamic Power Factor Correction Thyristor Module TSM-LC

Features

- Easy installation: it can be used similar as a contactor
- All the intelligence needed is offered within the thyristor module itself
- Reaction time: 5 milliseconds only
- Permanent self-controlling of:
  - voltage parameter
  - phase sequence
  - capacitor output
- Display of
  - operation
  - faults
  - activation

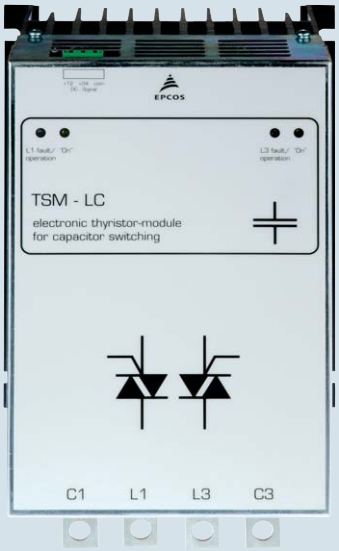

General

Conventional systems for power factor correction are used to optimize the power factor and reduce the level of harmonics in the grid. The usage of new technologies in modern industry has negative impacts on electric power quality of the main supply networks, e.g. frequent high load fluctuations and harmonic oscillation. Excessive currents, increased losses and flickering will not only influence the supply capacity but will also have a significant impact on the operation of sensitive electronic devices. The solution for this are dynamic power factor correction systems.

With the TSM-LC module we provide the main component – "electronic switch" – for dynamic power factor correction. The TSM-LC is a fast electronically controlled, self-observing thyristor switch for capacitive loads up to 50 kvar, which is capable to switch PFC capacitors within a few milliseconds as often as required.

⚠ Cautions:

Live parts in the PFC equipment must not be touched!

Warning signs in the PFC systems are required!

Wait 10 minutes after the main switch is turned off – until the voltage in the system has dropped to an uncritical value.

In non-detuned systems (400 V grid) capacitors with a higher voltage rating (e.g. 440 V) are needed.

In detuned systems (400 V grid) capacitors with a voltage of 525 V are needed.

For discharging the capacitors, special high-voltage resistors type EW-22 are required. Standard resistors cannot be used!

In dynamic PFC systems discharge reactors cannot be used (this would be a short circuit of the high-voltage DC)!

In PFC systems without filter circuit reactors current limiting reactors are required (e.g. BD-100) for the TSM.

For short circuit protection, superfast electronic fuses for protection of the thyristor are required, standard HRC fuses are not suitable:

63 A/690 V (25 kvar);
125 A/690 V (50 kvar) – 3 pieces per module.

⚠ Failure to follow cautions may result, worst case, in premature failures or physical injury.

Dynamic Power Factor Correction
Thyristor Module TSM-LC

Technical data

Voltage	3 x 400 V
Max. power	type TSM-LC 25: 25 kvar for PFC systems with / without reactors up to 14% type TSM-LC 50: 50 kvar for PFC systems with / without reactors up to 14% a cascading of several modules is possible for increasing the kvar output
Activation	10–24 V DC, internal insulated
Switching time	approx. 5 ms
Control features	– voltage (availability and value) – phase sequence – capacitor output
Power circuit	connection: 2 x two-phase (L1, L3) with 4 terminals 25 mm²
Losses	type TSM-LC 25 Pv (in W) = 2.0 · I (in A) typical 75 W (therm) type TSM-LC 50 Pv (in W) = 2.0 · I (in A) typical 150 W (therm)
Fuses	type TSM-LC 25 electronic fuse “superfast” NH00 AC 690 V – 63 A type TSM-LC 50 electronic fuse “superfast” NH00 AC 690 V – 125 A
Dimensions	157 x 200 x 180 mm (w x h x d)

Thyristor modules for dynamic power factor correction

Type	Description	Voltage V	Output kvar at 50 Hz	Ordering code	Packing unit
TSM-LC 25	RT PFC module	400	25	B44066T0025E402	1
TSM-LC 50	RT PFC module	400	50	B44066T0050E402	1

Accessories for TSM-LC modules

Type / Description	Ordering code	Packing unit
Discharge resistors EW-22 to be used for 25 kvar or 50 kvar stage, one unit per stage required	B44066T0022E400	1
Current limitation reactor BD-100 for PFC systems without detuning reactors to be used for 25 kvar or 50 kvar step, two units per step required	B44066T0100E400	1

Thyristor modules are delivered preset for detuned applications. They can be modified by the user for conventional applications with an internal switch.

EW-22

Please read the *Important notes* on page 10 and *Cautions* on page 11–13.

Dynamic Power Factor Correction Thyristor Module TSM-LC

Dynamic PFC network: one stage

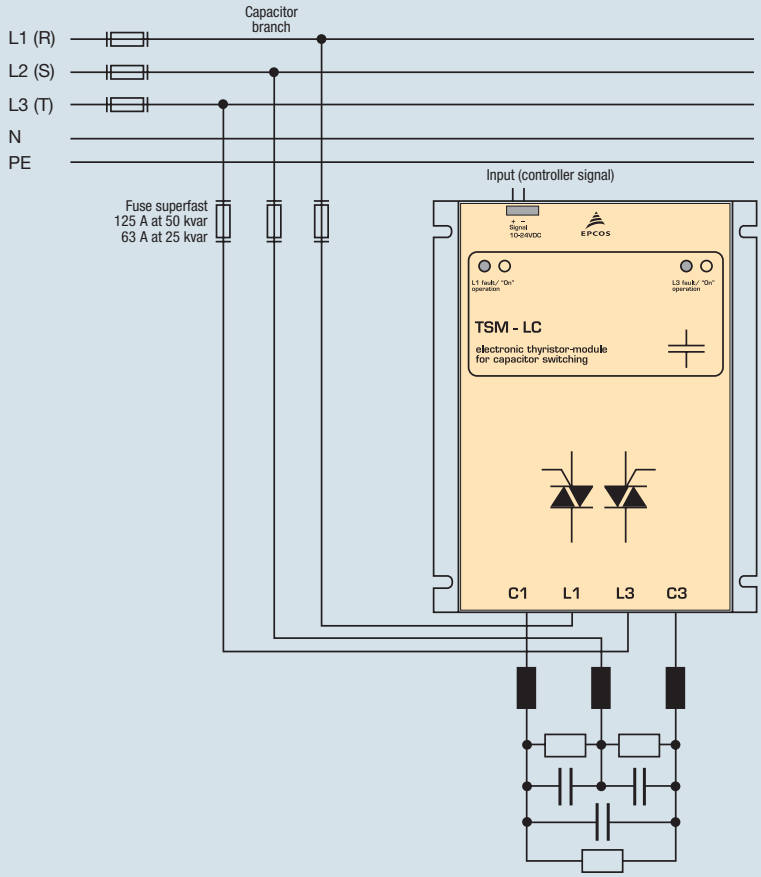

Dynamic Power Factor Correction Thyristor Module TSM-LC

Dynamic PFC network: multiple stages

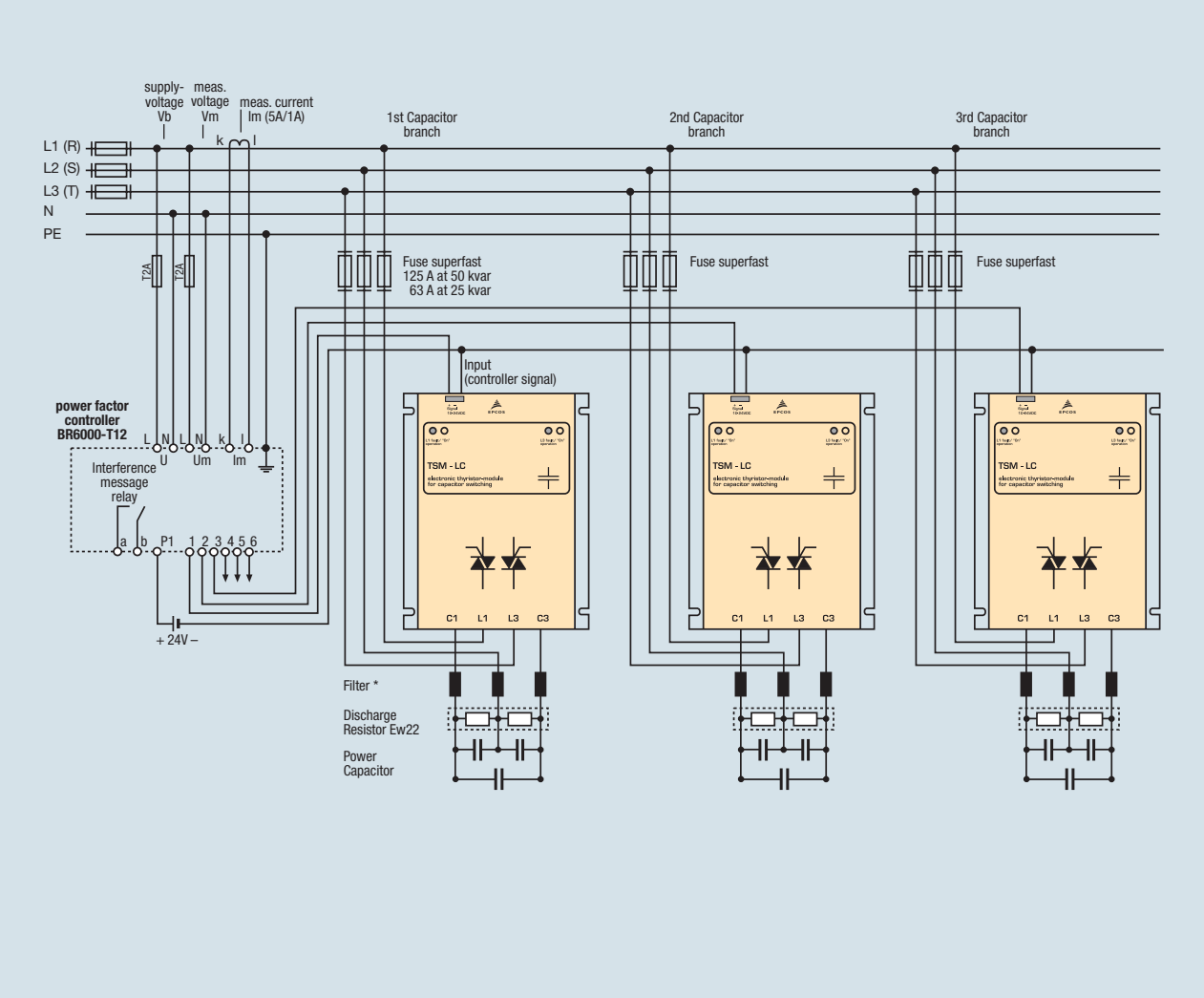

Fundamentals of Power Factor Correction

The rational use of electrical energy calls for economical generation, transmission and distribution with little loss. That means restricting all factors in electrical networks that cause losses. One of these factors is lagging reactive power. Loads in industrial and public electrical networks are primarily of an ohmic-inductive nature.

The purpose of systems for power factor correction in networks is to compensate the generated lagging reactive power by leading reactive power at defined nodes. In this way impermissibly high voltage drops and additional ohmic losses are also avoided. The necessary leading power is produced by capacitors parallel to the supply network, as close as possible to the inductive load. Static capacitive compensation devices reduce the lagging reactive power component transmitted over the network. If network conditions alter, the required leading reactive power can be matched in steps by adding and taking out single power capacitors (automatic PFC) to compensate the lagging reactive power.

Benefits of power factor correction

- Payback in 8 to 24 months through lower power costs

Power factor correction reduces the reactive power in a system. Power consumption and thus power costs drop in proportion.

- Effective installation use

An improved power factor means that an electrical installation works more economically (higher effective power for the same apparent power).

- Improved voltage quality
- Reduced voltage drop
- Optimum cable design

Cable cross-section can be reduced with improvement of power factor (less current). In existing installations for instance, extra or higher power can be transmitted.

- Reduced transmission losses

The transmission and switching devices carry less current, i.e. only the effective power, meaning that the ohmic losses in the leads are reduced.

Key components

Capacitor

Power factor correction capacitors produce the necessary leading reactive power to compensate the lagging reactive power. PFC capacitors should be capable of withstanding high inrush currents caused by switching operations (> 100 · I_R). If capacitors are connected in parallel, i.e. as banks, the inrush current will increase (≥ 150 · I_R) because the charging current comes from the grid as well as from capacitors parallel to the one switched.

PFC controller

Modern PFC controllers are microprocessor-based. The microprocessor analyzes the signal from a current transformer and produces switching commands to control the contactors that add or remove capacitor stages. Intelligent control by microprocessor-based PFC controllers ensures even utilization of capacitor stages, minimized number of switching operations and optimized life cycle of the capacitor bank.

Capacitor contactor

Contactors are electromechanical switching elements used to switch capacitors or reactors and capacitors in standard or detuned PFC systems. The switching operation can be performed by mechanical contacts or an electronic switch (semiconductor). The latter solution is preferable if fast switching is required for a sensitive load for example.

Reactor (compensation and filtering)

Power distribution networks are increasingly subjected to harmonic pollution from modern power electronic devices, so called nonlinear loads, e.g. drives, uninterruptible power supplies, electronic ballasts. Harmonics are dangerous for capacitors connected in the PFC circuit, especially if the capacitors operate at resonant frequency. The series connection of reactor and capacitor to detune the series resonant frequency (the capacitor's resonant frequency) helps to prevent capacitor damage. Most critical frequencies are the 5th and 7th harmonics (250 and 350 Hz at 50 Hz). Detuned capacitor banks also help to reduce the harmonic distortion level and clean the network.

Fuse

A HRC fuse or MCCB acts as a safety device for short circuit protection.

- HRC fuses do not protect a capacitor against overload – they are for short circuit protection only.
- The HRC fuse rating should be 1.6 to 1.8 times nominal capacitor current.

⚠ Do not use HRC fuses for switching (risk of arcing!). Refer to page 12.

Application examples

Conventional power factor correction

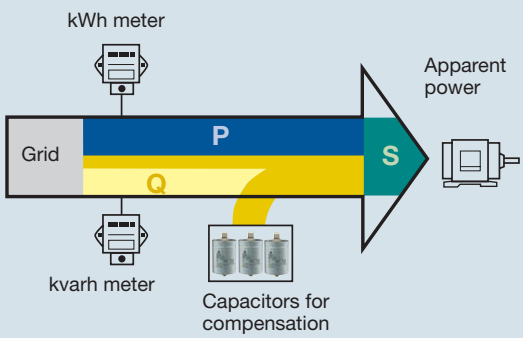

Harmonic filter with dynamic PFC

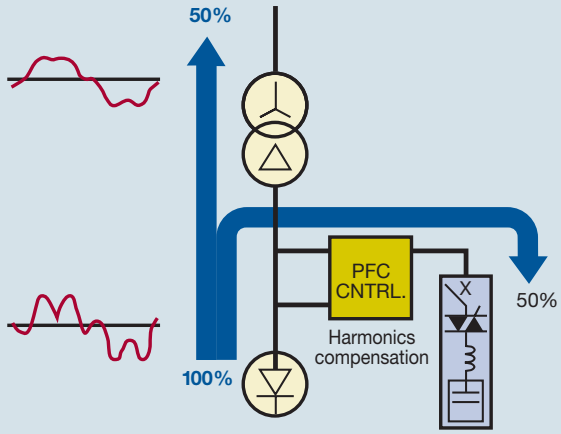

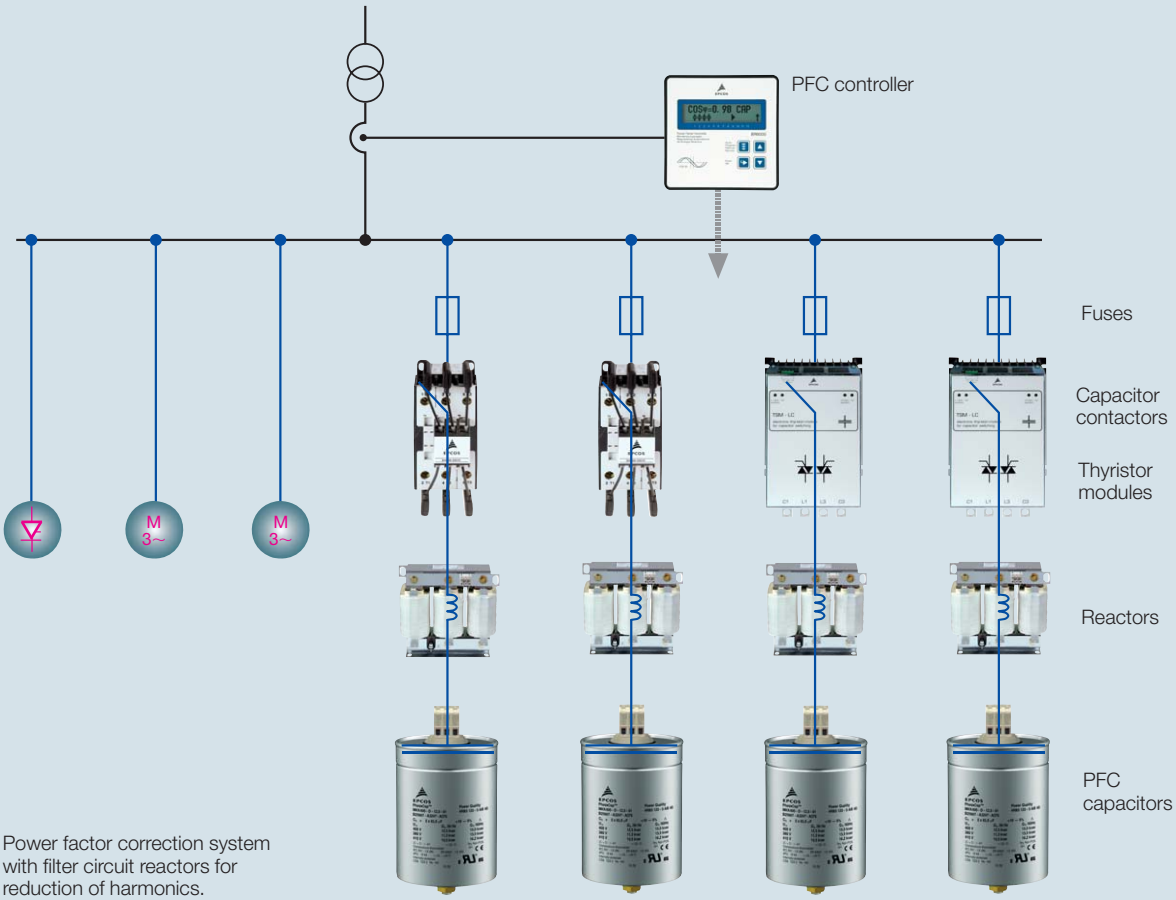

Power factor correction system with filter circuit reactors for reduction of harmonics.

Fundamentals of Power Factor Correction

Power factor correction

To achieve optimum power factor correction, a PFC system has to be designed for the reactive power required. The best method is to perform active and reactive power measurements prior to design. Measurements have to cover all important time periods during day- and nighttime to obtain reliable values for peak reactive power requirements.

PFC formulas (active, reactive, apparent power)

Active power

The amount of input power converted into output power is termed active power and generally indicated by P in watts [W] and defined by the following formula:

$$P = \sqrt{3} \cdot V \cdot I \cdot \cos \varphi \quad [W]$$

The entire input power, e.g. apparent power, should be converted into useful output power stated as active power, e.g. the real motor power output. The quality of such a power conversion is indicated as cos φ, the unity power factor.

Reactive power

Electrical machines work on the principle of conversion of electromagnetic energy (e.g. electric motors, transformers). Part of the input energy is consumed to create and maintain the magnetic field. Inductive loads shift the angle between voltage and current (to a value > 0). Power created by portions of V and I waveforms having opposite directions (+ and –) is called reactive power. This part of the energy (magnetic reversal energy), defined as reactive power Q in volt ampere reactive [var], cannot be converted into active power and is returned to the electrical supply network during changes of the magnetic field. But the same amount of energy will be consumed by the network again and required for the next change of the magnetic field.

$$Q = \sqrt{3} \cdot V \cdot I \cdot \sin \varphi \quad [var]$$

Apparent Power

In principle, applications of electrical equipment are based on conversion of electrical energy into some other form of energy. The electrical power drawn by equipment from the source is termed apparent power, indicated by S in volt ampere [VA], and consists of active and reactive power.

$$S = \sqrt{3} \cdot V \cdot I \quad [VA]$$

Power factor

Electrically, the power factor (indicated by k) of an electric circuit is defined as the cosine of the phase angle between the fundamental of voltage and current waveforms. Another definition of power factor is the ratio between active power and apparent power.

power factor cos φ = active power / apparent power = P / S

Reactive power compensation

Magnetic reversal energy supplied to the network (reactive power) in circuits without compensation can be stored temporarily in capacitors and then used for the next change of magnetism, i.e. circuits with reactive power compensation. To calculate the required capacitor reactive power Q_C in volt ampere reactive [var], the following formula is used:

$$Q_C = P \cdot (\tan \varphi 1 - \tan \varphi 2) \quad [var]$$

A capacitor of Q_C kvar will compensate the inductive Q and compensate to a cos φ of 1. It is not common practice to aim for a cos φ of 1 by installation of capacitors since it may result in overcompensation due to load changes and response time of the controller. Generally, public utilities or power companies specify a value (cos φ2) to which the existing power factor (cos φ1) should be corrected.

Fundamentals of Power Factor Correction

Connection and rating of capacitors

A general expression for the kvar rating of a capacitor:

$$Q_C = V_C \cdot I_C \quad [\text{var}]$$

$$Q_C = \frac{V_C \cdot V_C}{X_C} = \frac{(V_C)^2}{X_C}$$

$$X_C = \frac{1}{\omega \cdot C} = \frac{1}{2\pi \cdot f \cdot C}$$

$$Q_C = (V_C)^2 \cdot \omega \cdot C = (V_C)^2 \cdot 2\pi \cdot f \cdot C$$

Capacitor in single-phase PFC application

The capacitor is connected between the phase and neutral conductors and is subjected to the phase-neutral voltage (see above).

Capacitor in three-phase PFC application

■ STAR connection

The capacitor is subject to a voltage of (V_L / $\sqrt{3}$).

Thus total kvar compensation is calculated as:

$$Q_{TOT} = 3 \cdot \frac{(V_L)^2}{(\sqrt{3})^2} \cdot \omega \cdot C$$

$$C_{STAR} = \frac{Q_{TOT}}{(V_L)^2 \cdot \omega} = \frac{Q_{TOT}}{(V_L)^2 \cdot 2\pi \cdot f}$$

DELTA connection

The capacitor is subjected to line voltage V_L, phase to phase.

Thus total kvar compensation is calculated as:

$$Q_{TOT} = 3 \cdot (V_L)^2 \cdot \omega \cdot C$$

$$C_{DELTA} = \frac{Q_{TOT}}{3 \cdot (V_L)^2 \cdot \omega} = \frac{Q_{TOT}}{3 \cdot (V_L)^2 \cdot 2\pi \cdot f}$$

As a conclusion one can say:

$$C_{DELTA} = \frac{C_{STAR}}{3}$$

So PFC configurations are usually delta connected because star connection requires three times the capacitance of a delta connection.

Calculation of capacitor rating for industrial installation

■ Example 1: Given parameters:

Induction motor	220 kW
Network (line delta)	440 VAC, 3-phase
Frequency	50 Hz
Power factor	
– Current cos φ	0.7
– Target cos φ	0.9

Calculation: Capacitor ratings for
– STAR connection
– DELTA connection

Target to correct the power factor to 0.9:

$\cos \varphi 1 = 0.7$ $\quad \tan \varphi 1 = 1.02$

$\cos \varphi 2 = 0.9$ $\quad \tan \varphi 2 = 0.48$

$$Q_C = P\,(\tan \varphi 1 - \tan \varphi 2)$$
$$= 220 \cdot 1\,000\,(1.02 - 0.48)$$
$$= 118.8 \text{ kvar}$$

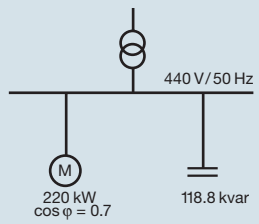

■ STAR connection:

$$V_C = \frac{V_L}{\sqrt{3}} = \frac{440}{\sqrt{3}} = 254 \text{ V}$$

$$C_{STAR} = \frac{Q_{TOT}}{(V_L)^2 \cdot \omega} = \frac{Q_{TOT}}{(V_L)^2 \cdot 2\pi \cdot f}$$

$$C_{STAR} = \frac{118.8 \cdot 1\,000}{(440)^2 \cdot 2\pi \cdot 50}$$
$$= 1\,954 \text{ µF / Line (phase)}$$

$$C_{TOT} = 5\,862 \text{ µF}$$

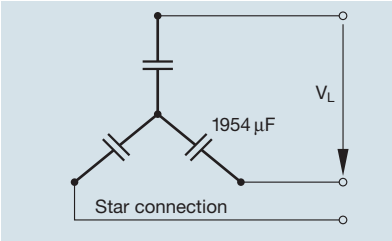

■ DELTA connection:

$$V_C = V_L = 440 \text{ V}$$

$$C_{DELTA} = \frac{Q_{TOT}}{3 \cdot (V_L)^2 \cdot \omega} = \frac{Q_{TOT}}{3 \cdot (V_L)^2 \cdot 2\pi \cdot f}$$

$$C_{DELTA} = \frac{118.8 \cdot 1\,000}{3 \cdot (440)^2 \cdot 2\pi \cdot 50}$$
$$= 651 \text{ µF / Line (phase)}$$

$$C_{TOT} = 1\,954 \text{ µF}$$

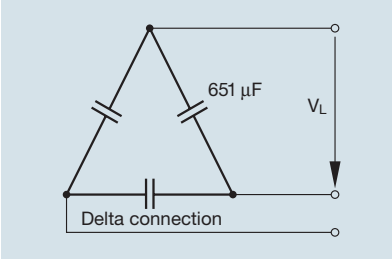

Capacitor type selection (e.g. PhaseCap B25667…)

To reach the target cos φ of 0.9, 118.8 kvar are required.

25 kvar · 4 +18.8 kvar = 118.8 kvar
= 4 pcs B25667A4417A375 +
1 pc B25667A4307A365 =
4 · 3 · 137 + 1 · 3 · 103 =
1 953 µF / phase

Apparent power transmission

Due to power factor correction, the required apparent power transmission can be reduced by the value $S_1 - S_2$.

S_1 uncompensated load:

$S_1 = P / \cos \varphi 1 = 220 / 0.7$
$= 314$ kVA

S_2 compensated load:

$S_2 = P / \cos \varphi 2 = 220 / 0.9$
$= 244$ kVA

Reduction of apparent power after compensation:

$S_1 - S_2 = 70$ kVA

Thus, additional power of
70 · (0.9) = 63 kW
can be supplied and transferred via the existing network.

The power losses decrease with the square of the current.

$P_{V1} - P_{V2} = I_1^2 - I_2^2$
$= \text{approx. } S_1^2 - S_2^2$

The resistive transmission losses (power loss) P_V are reduced by:

$$\frac{(S_1^2 - S_2^2) \cdot 100\%}{S_1^2} =$$

$$\frac{[(314)^2 - (244)^2] \cdot 100\%}{(314)^2} = 39.6\%$$

Cable cross-section calculation

Line current drawn by the motor:

I_1 uncompensated load (0.7):

$$I_1 = \frac{220 \cdot 1\,000}{\sqrt{3} \cdot 440 \cdot (0.7)} = 412 \text{ A}$$

I_2 compensated load (0.9):

$$I_2 = \frac{220 \cdot 1\,000}{\sqrt{3} \cdot 440 \cdot (0.9)} = 320 \text{ A}$$

Thus, the cable can carry an additional load of 92 A, or the designer can reduce the cable cross-section.

■ Example 2: Given parameters:

– Active power
P = 100 kW (peak)
– Actual cos φ
$= 0.75 = \varphi = 41.5° = \tan \varphi_1 = 0.88$
– Target cos φ*
$= 0.93 = \varphi = 21.5° = \tan \varphi_2 = 0.4$
* set by power utility

Calculation of compensation:

$Q_C = P \cdot (\tan \varphi_1 - \tan \varphi_2)$
$= 100 \cdot (0.88 - 0.4)$
$= 48$ kvar

to be compensated to meet the power factor requirement set by the power utility. Common compensation would recommend a capacitor of at least 50 kvar.

Calculation using capacitor's reactive power Q_C table:

cos φa (actual) = 0.75*
cos φt (target) = 0.94*
* the cross point indicates factor
F = 0.52

$Q_C = P \cdot F = 100 \cdot 0.52$
$= 52.0$ kvar

The required appropriate compensation to meet a cos φ of 0.93 is ≥ 52.0 kvar.

Capacitor output in case of operating voltage and/or frequency different to nominal ratings

$$Q_{New} = \left(\frac{V_{New}}{V_R}\right)^2 \cdot \frac{f_{New}}{f_R} \cdot Q_C$$

Ambient temperature

Capacitors are divided into temperature classes. Each class is represented by a number followed by a letter, e.g. –25 °/D. The number is the lowest ambient temperature at which a capacitor may operate. The upper limit temperature is indicated by the letter D, standing for 55 °C. A maximum case temperature of 60 °C must not be exceeded. Temperature is one of the main stress factors for polypropylene capacitors, having a major effect on their useful life. For higher temperature requirements up to 70 °C (with natural cooling) MKV capacitors from EPCOS should be selected.

⚠ Exceeding maximum allowed temperature may set the safety device out of operation.

Inrush current

Switching LV PFC capacitors, especially when they are in parallel with others that are already energized, can cause high inrush currents of up to 200 times rated current. This leads to additional stress on contactors as well as capacitors and reduces their useful life. In addition, high inrush currents have a negative effect on power quality, producing transients and voltage drops for example.

Although the MKK AC design with its wavy cut features excellent pulse withstand capability, limitation of inrush current is still recommended, e.g. capacitor contactors with inrush current limiting resistors or series – inductance (i.e. detuned harmonic filter).

As per IEC 60831 standard, a maximum of 5 000 switching operations is acceptable. Before considering a higher number of switching operations, please contact EPCOS.

Harmonics

Harmonics are produced in the operation of electric loads with a nonlinear voltage / current characteristic (e.g. rectifiers and inverters for drives, welding apparatus and uninterruptible power supplies). Harmonics are sinusoidal voltages and currents with higher frequencies of a multiple of the 50 or 60 Hz line frequency.

Note: In applications subject to harmonics, you should only use power capacitors with reactors, so called detuned capacitor banks. Depending on the selected series resonant frequency, part of the harmonic current is absorbed by the power capacitor. The remainder of the harmonic current flows into the superordinate system. The use of power capacitors with reactors reduces harmonic distortion and lessens the disturbing effect on proper operation of other electric loads.

A major reason for installing detuned capacitor banks is to avoid resonance. Resonance can multiply existing harmonics and create power quality problems, as well as causing damage to distribution equipment.

Resonance cases must be avoided by appropriate application design in any case!

Max. total RMS capacitor current (incl. fundamental harmonic current) specified in technical data of the specific series must not be exceeded.

⚠ Safety

- Ensure good effective grounding for capacitor enclosures.
- Provide means of disconnecting and insulating a faulty component / bank.
- Handle capacitors carefully, because they may still be charged even after disconnection due to faulty discharging devices.
- Follow good engineering practice.
- Do not use HRC fuses to power a capacitor up and down (risk of arcing).
- Remember that the terminals of capacitors, connected bus bars and cables as well as other devices may also be energized.

Overcurrent and short circuit protection

- Use HRC fuses or MCCBs for short circuit protection. Short circuit protection and connecting cables should be selected so that 1.5 times the rated capacitor current can be permanently handled.
- HRC fuses do not protect a capacitor against overload – they are only for short circuit protection.
- The HRC fuse rating should be 1.6 to 1.8 times rated capacitor current.
- Do not use HRC fuses to switch capacitors (risk of arcing).
- Use thermal / thermal magnetic overcurrent relays for overload protection.

Maintenance

- Periodically check that connections and terminals are tight.
- Regularly clean terminals / bushings to avoid short circuits due to dust and soiling.
- Check short circuit protection fuses.
- Make a current reading twice annually to see if application conditions have altered.
- Consider upgrading or modifying the PFC system if the application environment has changed.
- In the event of a current above nominal, check your application for possible modification.
- In the event of a significant increase in nonlinear loading, call in a consultant for a harmonics examination.
- If harmonics are present, consider installation of a detuned capacitor bank (reactors).
- Check discharge resistors / reactors and their functioning:
  - Power the capacitor up and down.
  - The voltage across the terminals must fall to < 75 V within 60 s.

Capacitor life expectancy

Capacitors operation between any rated value and the corresponding absolute maximum rating is an overload that derates life expectancy of the device.

Simultaneous overload conditions or exceeding any absolute maximum rating may reduce life expectancy significantly.

Mounting

Power capacitors should be installed in a cool and well ventilated location, and not close to objects that give off heat, like filter circuit reactors and furnaces, or in direct sunlight.

Leave enough space on top of the capacitor and do not fix any mounting components at the crimp or on top to allow longitudinal expansion of the can and proper functioning of the overpressure disconnector.

A minimum spacing of 20 mm is necessary between capacitors to ensure proper cooling.

The M12 stud also serves for grounding. Connect to ground or connect the capacitor to other conductive items that are grounded. Note that suitable connectors must penetrate existing layers of lacquer to achieve good and constant conduction and sufficient current-carrying capability.

Tighten the threaded M12 stud on the bottom of the case with 10 Nm torque.

Mounting

PhaseCap, WindCap:
Any mounting position of the capacitor is possible, vertical and horizontal.

Remember to ensure sufficient cooling.

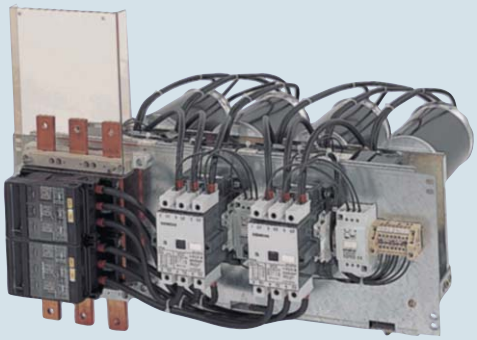

Capacitors installed in a cabinet should be at the bottom to ensure the least temperature stress.

Connection of supply cables for PhaseCap Premium, PhaseCap HD, WindCap, PhiCap

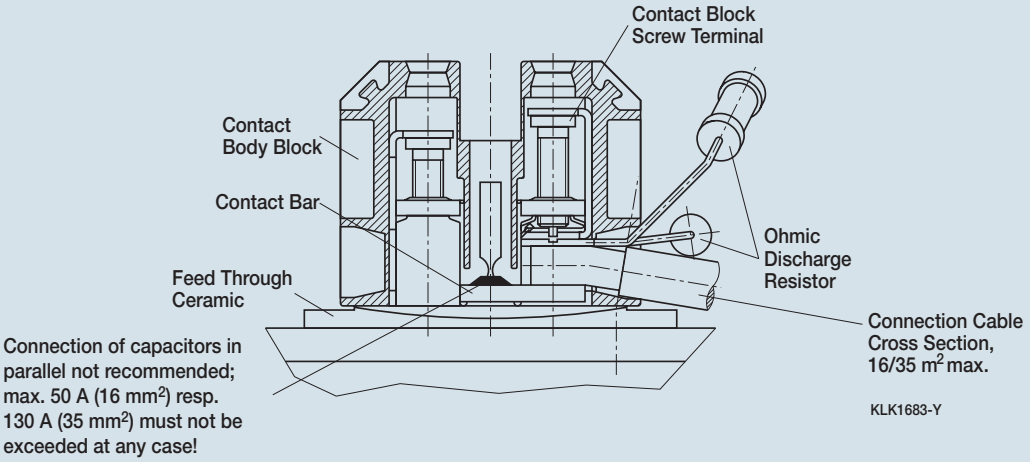

When connecting supply cables, observe the maximum permissible torque of 1.2 Nm for PhaseCap Premium, WindCap and PhiCap; 2.5 Nm for PhaseCap HD.

The connecting cable should be flexible and of copper.

Do not use hard core cable!

Maximum cable cross-section is 16 mm² for PhaseCap Premium, WindCap and PhiCap; 35 mm² for PhaseCap HD.

Discharge resistors

- Discharge resistors are required to discharge capacitors and protect humans against electric shock hazard as well as to switch capacitors in automatic PFC equipment (opposing phase).
- EPCOS discharge resistors are designed to discharge capacitors to 75 V or less within 60 seconds (types marked with [4)] in the table of ordering codes: ≤ 75 V in 90 seconds).
- Before switching again, capacitors must be discharged to 10% or less of nominal voltage.
- Discharge resistors are included in delivery.

⚠ Caution: Discharge and short circuit capacitor before handling!

Discharge resistors set

Correct mounting

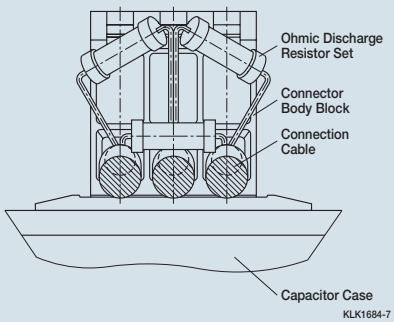

Wrong mounting

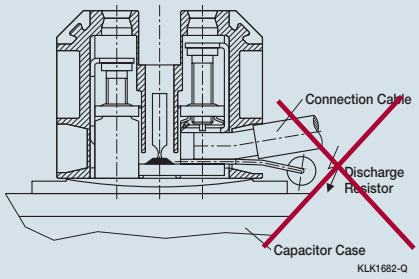

- Discharge resistors must not be configured between a connecting cable and the top of the capacitor – short circuit risk.
- Make sure resistors are firmly clamped and that there is enough space between resistors and between them and metallic parts of the capacitor case.
- Discharge resistors must not touch any metallic part or the insulation of the cable.

Ceramic discharge module

PhaseCap B series / PhiCap D series

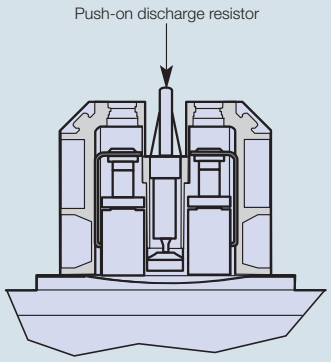

- New discharge module should only be used for PhaseCap B series / PhiCap D series!
- Handle discharge module with care (risk of breaking).

Standard values: selection table for cables and cross-sections

Power	230 V – 60 Hz			400 V – 50 Hz			440 V – 60 Hz			480 V – 60 Hz		
	Current	Fuse	Sect.	Current	Fuse	Sect.	Current	Fuse	Sect.	Current	Fuse	Sect.
kvar	A	A	mm²	A	A	mm²	A	A	mm²	A	A	mm²
2.5	6.3	10	2.5	3.6	10	1.5	3.3	10	1.5	3	10	1.5
5	12.6	25	4	7.2	16	2.5	6.6	16	2.5	6	16	2.5
7.5	18.8	35	6	10.8	16	2.5	9.9	16	2.5	9	16	2.5
10	25.1	50	10	14.4	25	4	13.2	25	4	12	25	4
15	37.7	63	16	21.6	35	6	19.8	35	6	18	35	6
20	50.2	80	25	28.8	50	10	26.4	50	10	24	50	10
25	62.8	100	35	36.0	63	16	33.0	63	16	30	50	16
30	75.3	125	50	43.2	80	25	39.6	80	25	36	63	25
40	100.4	160	70	57.6	100	35	52.8	100	35	48	80	35
50	125.5	200	120	72.0	125	35	66.0	125	35	60	100	35
75	188.3	350	2 x 95	108.0	160	70	99.0	160	70	90	160	70
100	251.0	400	2 x 120	144.0	250	120	132.0	200	120	120	200	120
150	–	–	–	216.0	350	2 x 95	198.0	350	2 x 95	180	350	2 x 95
200	–	–	–	288.0	500	2 x 120	264.0	500	2 x 120	240	400	2 x 120

Selection of connecting cable cross-section, HRC fuse rating

The cross-section figures are guidelines for operation in normal conditions at ambient temperatures up to 40 °C. Upgrade accordingly if conditions, e.g. temperature or harmonics, differ.

The internal wiring of a capacitor bank is normally possible with a smaller cross-section. Various parameters such as temperature inside the cabinet, cable quality, maximum cable isolation temperature, single- or multi-core cable and cable length have to be considered for proper selection.

Please read the *Important notes* on page 10 and *Cautions* on page 11–13.

Standard values: selection table for fixed PFC

Individual motors						Transformers	
Motor HP	Capacitor power in kvar (according to RPM) 3 000	1 500	1 000	750	500	Transfomer kVA	Capacitor power kvar
2.5	1	1	1.5	2	2.5	100	5
5	2	2	2.5	3.5	4	160	6.25
7.5	2.5	3	3.5	4.5	5.5	200	7.5
10	3	4	4.5	5.5	6.5	250	10
15	4	5	6	7.5	9	315	12.5
20	5	6	7	9	12	400	15
25	6	7	9	10.5	14.5	500	20
30	7	8	10	12	17	630	25
40	9	10	13	15	21	800	30
50	11	12.5	16	18	25	1 000	40
60	13	14.5	18	20	28	1 250	50
70	15	16.5	20	22	31	1 600	60
80	17	19	22	24	34	2 000	80
90	19	21	24	26	37		
100	21	23	26	28	40		
120	25	27	30	32	46		
150	31	33	36	38	55		
180	37	39	42	44	62		
200	40	42	45	47	67		
225	44	46	49	51	72		
250	48	50	53	65	76		

Individual PFC for motors

The capacitor output should be approx. 90% of the apparent power of the motor when idle. This means a power factor of 0.9% at full load and 0.95–0.98 during idling.

Important: The capacitor output must not be rated too high for individual compensated machines where the capacitor is directly connected with the motor clamp. This especially applies when the machine has a big oscillating weight and still continues to rotate after switching off. The capacitor placed in parallel may act as a generator for the motor which will cause serious overvoltages. The consequence could be heavy damage to the capacitor as well as to the motor.

Individual PFC of transformers

There are regional differences in the guidelines of power suppliers concerning the admissible size of capacitors directly connected with a transformer. Therefore a consultation with the respective power supplier is recommended before installation of a compensation bank. Modern transformers have laminations which only need low capacity to reverse the magnetism. In case the capacitor output is too high, stress increase may occur during idling.

Capacitors with built-in fuse switches are suitable. When these capacitors are directly connected to the transformer clamps, you must make sure that the input lead to the capacitor is rated for the full short circuit power.

⚠ Important: The fuse switches are operated by capacitive load. To avoid dangerous arcs, they may never be drawn under load.

If disconnection of the capacitor should be possible even when the transformer is under operation, a power capacitor with automatic switch must be chosen.

Fundamentals of Power Factor Correction

Detuned filtering (PFC-DF)

General

When installing capacitors for PFC purposes, we face the problem of dealing with harmonics. We have to take them into account when designing the PFC system in order to prevent parallel and / or series resonance conditions that would damage the whole electrical system.

When PFC capacitors are connected, the inductance of the transformer together with the capacitors form a resonant circuit that could be excited by a harmonic current generated by the load. This resonant circuit has a resonance frequency, and if a harmonic current of this frequency (or close to it) exists, it will lead the circuit into a resonance condition where high current will flow through the branches (L: the transformer, and C: the capacitor bank), overloading them and raising the voltage across them and across the whole electrical system that is connected in parallel.

PFC detuned filtering is a technique to correct the power factor avoiding the risk of resonance condition performed by shifting the resonance frequency to lower values where no harmonic currents are present.

This is achieved by modifying the basic LC circuit formed by the transformer and the capacitor bank, introducing a filter reactor in series with the capacitors, making this way a more complex resonant circuit but with the desired feature of having a resonance frequency below the first existing harmonic. This way it's not possible to have a real resonance condition.

Besides this main objective, the reactor connected in series with capacitors form a series resonant circuit with a certain tuning frequency at which the branch will offer a low impedance path. Filtering of harmonic currents and "cleaning" of the grid will be achieved.

Components for PFC detuned filters must be carefully selected according to the desired PFC purpose, to the harmonics present in the system, to some features of the system like short circuit power and impedances, to the desired filtering effect and to the characteristics of the resonant circuit configured.

For example, the voltage across the capacitors will be higher than the nominal grid voltage when they have a reactor connected in series.

The reactors must be selected in line with the inductance value to obtain the desired tuning frequency and current capability high enough for the harmonic current absorption that can be expected. The tuning frequency is usually indirectly referred to as the detuning factor p and expressed as a percentage.

PFC detuned filtering is an engineering speciality that takes experienced know-how to implement it in a satisfying and safe way.

The next page shows some guidelines for design and selection of components for PFC-DF.

Top 10 considerations for High-Performance PFC-DF

1. Determine the necessary effective power (kvar) of the capacitor bank in order to obtain the desired PF.
2. Design the capacitor stages in such a way that the sensibility of the bank is around 15–20% of the total available power. It's not useful to have a more sensitive bank that reacts with a 5 or 10% of the total power because this would lead to a high amount of switching operations, wasting the equipment unnecessarily when the real objective is to have a high average PF.
3. Try to design the bank with standard kvar values of effective power steps, preferably multiples of 25 kvar.
4. Measure the presence of harmonic currents in the main feeder cable of the system without capacitors at all possible load conditions. Determine frequency and maximum amplitude for every harmonic that could exist.
   Calculate the Total Harmonic Distortion of Current $THD\text{-}I = 100 \cdot SQR\ [(I_3)^2 + (I_5)^2 + \ldots + (I_R)^2]/I_I$
   Calculate every existing value for $THD\text{-}I_R = 100 \cdot I_R/I_I$
5. Measure the presence of harmonic voltages that might come from outside your system, if possible measure the HV side.
   Calculate the Total Harmonic Distortion of Voltage $THD\text{-}V = 100 \cdot SQR\ [(U_3)^2 + (U_5)^2 + \ldots + (U_N)^2]/U_I$
6. Are there harmonics such as THD-I > 10% or THD-V > 3% (measured without capacitors)?
   If YES → use PFC-DF and go to consideration 7.
   If NO → use standard PFC and skip considerations 7, 8 and 9.
7. Is there 3rd harmonic content, $I_3 > 0.2 \cdot I_5$?
   If YES → use PFC-DF with p = 14% and skip consideration 8.
   If NO → use PFC-DF with p = 7% or 5.67% and go to consideration 8.
8. THD-V is:
   3–7% → use PFC-DF with p = 7%
   > 7% → use PFC-DF with p = 5.67%
   > 10% → ask for special filter design
9. Select the proper components using EPCOS tables for PFC-DF and standard values for effective power, the voltage and frequency of your grid, and the determined detuned factor p.
10. Always use genuine EPCOS application-specific designed components for PFC-DF. Please observe that reactors are specified for their effective power at grid voltage and frequency. This power will be the real effective power of the whole LC set at fundamental frequency. Capacitors for PFC-DF must be selected for a higher rated voltage than the grid's because of the overvoltage caused by the series connection with the reactor. Contactors for capacitors are designed as application-specific to reduce inrush capacitors currents and to handle capacitive loads in a reliable way.

Fundamentals of Power Factor Correction

Definition of capacitor reactive power Qc

Current (ACTUAL) tan φ	cos φ	Achievable (TARGET) cos φ 0.80	0.82	0.85	0.88	0.90	0.92	0.94	TARGET cos φ = 0.96 Q cos φ ≤ 1 $Q_c = P_{mot} \cdot F(0.96) = \ldots$ [kvar] 100 · 1.01 = 101.0 kvar 0.96	0.98	1.00
		Faktor F									
3.18	0.30	2.43	2.48	2.56	2.64	2.70	2.75	2.82	2.89	2.98	3.18
2.96	0.32	2.21	2.26	2.34	2.42	2.48	2.53	2.60	2.67	2.76	2.96
2.77	0.34	2.02	2.07	2.15	2.23	2.28	2.34	2.41	2.48	2.56	2.77
2.59	0.36	1.84	1.89	1.97	2.05	2.10	2.17	2.23	2.30	2.39	2.59
2.43	0.38	1.68	1.73	1.81	1.89	1.95	2.01	2.07	2.14	2.23	2.43
2.29	0.40	1.54	1.59	1.67	1.75	1.81	1.87	1.93	2.00	2.09	2.29
2.16	0.42	1.41	1.46	1.54	1.62	1.68	1.73	1.80	1.87	1.96	2.16
2.04	0.44	1.29	1.34	1.42	1.50	1.56	1.61	1.68	1.75	1.84	2.04
1.93	0.46	1.18	1.23	1.31	1.39	1.45	1.50	1.57	1.64	1.73	1.93
1.83	0.48	1.08	1.13	1.21	1.29	1.34	1.40	1.47	1.54	1.62	1.83
1.73	0.50	0.98	1.03	1.11	1.19	1.25	1.31	1.37	1.45	1.63	1.73
1.64	0.52	0.89	0.94	1.02	1.10	1.16	1.22	1.28	1.35	1.44	1.64
1.56	0.54	0.81	0.86	0.94	1.02	1.07	1.13	1.20	1.27	1.36	1.56
1.48	0.56	0.73	0.78	0.86	0.94	1.00	1.05	1.12	1.19	1.28	1.48
1.40	0.58	0.65	0.70	0.78	0.86	0.92	0.98	1.04	1.11	1.20	1.40
1.33	0.60	0.58	0.63	0.71	0.79	0.85	0.91	0.97	1.04	1.13	1.33
1.30	0.61	0.55	0.60	0.68	0.76	0.81	0.87	0.94	1.01	1.10	1.30
1.27	0.62	0.52	0.57	0.65	0.73	0.78	0.84	0.91	0.99	1.06	1.27
1.23	0.63	0.48	0.53	0.61	0.69	0.75	0.81	0.87	0.94	1.03	1.23
1.20	0.64	0.45	0.50	0.58	0.66	0.72	0.77	0.84	0.91	1.00	1.20
1.17	0.65	0.42	0.47	0.55	0.63	0.68	0.74	0.81	0.88	0.97	1.17
1.14	0.66	0.39	0.44	0.52	0.60	0.65	0.71	0.78	0.85	0.94	1.14
1.11	0.67	0.36	0.41	0.49	0.57	0.63	0.68	0.75	0.82	0.90	1.11
1.08	0.68	0.33	0.38	0.46	0.54	0.59	0.65	0.72	0.79	0.88	1.08
1.05	0.69	0.30	0.35	0.43	0.51	0.56	0.62	0.69	0.76	0.85	1.05
1.02	0.70	0.27	0.32	0.40	0.48	0.54	0.59	0.66	0.73	0.82	1.02
0.99	0.71	0.24	0.29	0.37	0.45	0.51	0.57	0.63	0.70	0.79	0.99
0.96	0.72	0.21	0.26	0.34	0.42	0.48	0.54	0.60	0.67	0.76	0.96
0.94	0.73	0.19	0.24	0.32	0.40	0.45	0.51	0.58	0.65	0.73	0.94
0.91	0.74	0.16	0.21	0.29	0.37	0.42	0.48	0.55	0.62	0.71	0.91
0.88	0.75	0.13	0.18	0.26	0.34	0.40	0.46	0.52	0.59	0.68	0.88
0.86	0.76	0.11	0.16	0.24	0.32	0.37	0.43	0.50	0.57	0.65	0.86
0.83	0.77	0.08	0.13	0.21	0.29	0.34	0.40	0.47	0.54	0.63	0.83
0.80	0.78	0.05	0.10	0.18	0.26	0.32	0.38	0.44	0.51	0.60	0.80
0.78	0.79	0.03	0.08	0.16	0.24	0.29	0.35	0.42	0.49	0.57	0.78
0.75	0.80		0.05	0.13	0.21	0.27	0.32	0.39	0.46	0.55	0.75
0.72	0.81			0.10	0.18	0.24	0.30	0.36	0.43	0.52	0.72
0.70	0.82			0.08	0.16	0.21	0.27	0.34	0.41	0.49	0.70
0.67	0.83			0.05	0.13	0.19	0.25	0.31	0.38	0.47	0.67
0.65	0.84			0.03	0.11	0.16	0.22	0.29	0.36	0.44	0.65
0.62	0.85				0.08	0.14	0.19	0.26	0.33	0.42	0.62
0.59	0.86				0.05	0.11	0.17	0.23	0.30	0.39	0.59
0.57	0.87					0.08	0.14	0.21	0.28	0.36	0.57
0.54	0.88					0.06	0.11	0.18	0.25	0.34	0.54
0.51	0.89					0.03	0.09	0.15	0.22	0.31	0.51
0.48	0.90						0.06	0.12	0.19	0.28	0.48
0.46	0.91						0.03	0.10	0.17	0.25	0.46
0.43	0.92							0.07	0.14	0.22	0.43
0.40	0.93							0.04	0.11	0.19	0.40
0.36	0.94								0.07	0.16	0.36
0.33	0.95									0.13	0.33

$Q_C = P_A \cdot (\tan \varphi 1 - \tan \varphi 2)$
Q_C [kvar] = $P_A \cdot F$ = active power [kW] · factor "F"
$P_A = S \cdot \cos \varphi$ = apparent power · cos φ
tan φ1 + φ2 according to cos φ values ref. table

Example:

Actual motor power	P = 100 kW
ACTUAL cos φ	0.61
TARGET cos φ	0.96
Factor F from table	1.01
Capacitor reactive power Q_C	
Q_C = 100 · 1.01 = 101.0 kvar	

Component selection table for LV PFC antiresonance filter circuits

Detuning factor	Effective filter output	Voltage increase on capacitor	Recommended min. capacitor voltage	Capacitor output	Calculated capacitance
%	kvar	V	V	kvar	3·µF
Grid voltage: 400 V – 50 Hz detuned filters components selection table					
5.67	10.0	424	440	11	62
5.67	12.5	424	440	14	78
5.67	20.0	424	440	23	125
5.67	25.0	424	440	28	156
5.67	40.0	424	440	45	250
5.67	50.0	424	440	57	312
5.67	75.0	424	440	85	469
5.67	100.0	424	440	114	625
7	10.0	430	440	11	61
7	12.5	430	440	14	77
7	20.0	430	440	22	123
7	25.0	430	440	28	154
7	40.0	430	440	45	246
7	50.0	430	440	56	308
7	75.0	430	440	84	462
7	100.0	430	440	112	617
14	10.0	465	480	12	57
14	12.5	465	480	15	71
14	20.0	465	480	24	114
14	25.0	465	480	30	142
14	40.0	465	480	49	228
14	50.0	465	480	61	285
14	75.0	465	480	92	427
14	100.0	465	480	123	570
Grid voltage: 400 V – 60 Hz detuned filters components selection table					
5.67	25.0	424	440	28	130
5.67	50.0	424	440	57	260
5.67	75.0	424	440	85	391
5.67	100.0	424	440	114	521
7	25.0	430	440	28	128
7	50.0	430	440	56	257
7	75.0	430	440	84	385
7	100.0	430	440	112	514
14	25.0	465	480	30	118
14	50.0	465	480	61	237
14	75.0	465	480	92	356
14	100.0	465	480	123	475

Reactor inductivity mH	Capacitor ordering code	Reactor ordering code	Contactor ordering code	Cable* cross-section mm²	Fuse** rating A
3.063	1 x B25667B5197A375	B44066D5010S400	B44066S1810J230	6	25
2.450	1 x B25667B4237A375	B44066D5012S400	B44066S1810J230	6	35
1.531	1 x B25667B4417A375	B44066D5020S400	B44066S2410J230	10	50
1.225	1 x B25667B4467A375	B44066D5025S400	B44066S3210J230	16	63
0.766	1 x B25667B4337A375 1 x B25667B4417A375	B44066D5040S400	B44066S6210J230	25	100
0.613	2 x B25667B4467A375	B44066D5050S400	B44066S6210J230	35	125
0.408	3 x B25667B4467A375	B44066D5075S400	B44066S7410J230	50	200
0.306	4 x B25667B4467A375	B44066D5100S400	–	70	250
3.835	1 x B25667B5197A375	B44066D7010S400	B44066S1810J230	6	25
3.068	1 x B25667B4237A375	B44066D7012S400	B44066S1810J230	6	35
1.918	1 x B25667B4417A375	B44066D7020S400	B44066S2410J230	10	50
1.534	1 x B25667B4467A375	B44066D7025S400	B44066S3210J230	16	63
0.959	1 x B25667B4337A375 1 x B25667B4417A375	B44066D7040S400	B44066S6210J230	25	100
0.767	2 x B25667B4467A375	B44066D7050S400	B44066S6210J230	35	125
0.511	3 x B25667B4467A375	B44066D7075S400	B44066S7410J230	50	200
0.384	4 x B25667B4467A375	B44066D7100S400	–	70	250
8.295	1 x B25667B5177A375	B44066D1410S400	B44066S1810J230	6	25
6.636	1 x B25667B4207A375	B44066D1412S400	B44066S1810J230	6	35
4.148	1 x B25667B4347A375	B44066D1420S400	B44066S2410J230	10	50
3.318	1 x B25667B4417A365	B44066D1425S400	B44066S3210J230	16	63
2.074	2 x B25667B5347A375	B44066D1440S400	B44066S6210J230	25	100
1.659	2 x B25667B4417A365	B44066D1450S400	B44066S6210J230	35	125
1.106	3 x B25667B4417A365	B44066D1475S400	B44066S7410J230	50	200
0.830	4 x B25667B4417A365	B44066D1499S400	–	70	250
1.021	1 x B25667B4417A375	B44066D5025S401	B44066S3210J230	16	63
0.510	2 x B25667B4417A375	B44066D5050S401	B44066S6210J230	35	125
0.340	3 x B25667B4417A375	B44066D5075S401	B44066S7410J230	50	200
0.255	4 x B25667B4417A375	B44066D5100S401	–	70	250
1.278	1 x B25667B4417A375	B44066D7025S401	B44066S3210J230	16	63
0.639	2 x B25667B4417A375	B44066D7050S401	B44066S6210J230	35	125
0.426	3 x B25667B4417A375	B44066D7075S401	B44066S7410J230	50	200
0.320	4 x B25667B4417A375	B44066D7100S401	–	70	250
2.765	1 x B25667B5347A375	B44066D1425S401	B44066S3210J230	16	63
1.383	2 x B25667B5347A375	B44066D1450S401	B44066S6210J230	35	125
0.922	3 x B25667B5347A375	B44066D1475S401	B44066S7410J230	50	200
0.691	4 x B25667B5347A375	B44066D1499S401	–	70	250

* Cable cross-section of capacitor bank internal wiring per selected kvar stage, e.g. between fuse-contactor-reactor-total capacitor output. Flexible copper wire to be used
** Fuse size of HRC fuses for short circuit protection of each individual stage of a capacitor bank

Component selection table for LV PFC antiresonance filter circuits

Detuning factor	Effective filter output	Voltage increase on capacitor	Recommended min. capacitor voltage	Capacitor output	Calculated capacitance
%	kvar	V	V	kvar	3 · µF
Grid voltage: 440 V – 50 Hz detuned filters components selection table					
5.67	10.0	466	480	11	51
5.67	12.5	466	480	14	64
5.67	20.0	466	480	22	103
5.67	25.0	466	480	28	129
5.67	40.0	466	480	44	206
5.67	50.0	466	480	56	258
5.67	75.0	466	480	84	387
5.67	100.0	466	480	112	517
7	10.0	473	480	11	50
7	12.5	473	480	13	63
7	20.0	473	480	22	101
7	25.0	473	480	27	127
7	40.0	473	480	44	203
7	50.0	473	480	55	254
7	75.0	473	480	83	382
7	100.0	473	480	110	509
14	10.0	512	525	12	47
14	12.5	512	525	15	58
14	20.0	512	525	24	94
14	25.0	512	525	30	117
14	40.0	512	525	48	188
14	50.0	512	525	61	235
14	75.0	512	525	91	353
14	100.0	512	525	122	471

Reactor inductivity mH	Capacitor ordering code	Reactor ordering code	Contactor ordering code	Cable* cross-section mm²	Fuse** rating A
3.706	1 x B25667B5177A375	B44066D5010S440	B44066S1810J230	6	25
2.965	1 x B25667B4207A375	B44066D5012S440	B44066S1810J230	6	35
1.853	1 x B25667B4347A375	B44066D5020S440	B44066S2410J230	10	50
1.482	1 x B25667B5177A375 1 x B25667B4207A375	B44066D5025S440	B44066S3210J230	16	63
0.927	1 x B25667B4277A375 1 x B25667B4347A375	B44066D5040S440	B44066S6210J230	25	100
0.741	1 x B25667B4347A375 1 x B25667B4417A365	B44066D5050S440	B44066S6210J230	35	125
0.494	1 x B25667B4347A375 2 x B25667B4417A365	B44066D5075S440	B44066S7410J230	50	200
0.371	2 x B25667B4347A375 2 x B25667B4417A365	B44066D5100S440	–	70	250
4.641	1 x B25667B5177A375	B44066D7010S440	B44066S1810J230	6	25
3.713	1 x B25667B4207A375	B44066D7012S440	B44066S1810J230	6	50
2.320	1 x B25667B4347A375	B44066D7020S440	B44066S2410J230	10	50
1.856	1 x B25667B5177A375 1 x B25667B4207A375	B44066D7025S440	B44066S3210J230	16	63
1.160	1 x B25667B4277A375 1 x B25667B4347A375	B44066D7040S440	B44066S6210J230	25	100
0.928	1 x B25667B4417A365 1 x B25667B4347A375	B44066D7050S440	B44066S6210J230	35	125
0.619	1 x B25667B4347A375 2 x B25667B4417A365	B44066D7075S440	B44066S7410J230	50	200
0.464	2 x B25667B4347A375 2 x B25667B4417A365	B44066D7100S440	–	70	250
10.037	1 x B25667B5147A375	B44066D1410S440	B44066S1810J230	6	25
8.030	1 x B25667B5177A375	B44066D1412S440	B44066S1810J230	6	35
5.019	1 x B25667B5287A375	B44066D1420S440	B44066S2410J230	10	50
4.015	1 x B25667B5347A375	B44066D1425S440	B44066S3210J230	16	63
2.509	2 x B25667B5287A375	B44066D1440S440	B44066S6210J230	25	100
2.007	2 x B25667B5347A375	B44066D1450S440	B44066S6210J230	35	125
1.338	3 x B25667B5347A375	B44066D1475S440	B44066S7410J230	50	200
1.004	4 x B25667B5347A375	B44066D1499S440	–	70	250

* Cable cross-section of capacitor bank internal wiring per selected kvar stage,
e.g. between fuse-contactor-reactor-total capacitor output. Flexible copper wire to be used
** Fuse size of HRC fuses for short circuit protection of each individual stage of a capacitor bank

Component selection table for LV PFC antiresonance filter circuits

Detuning factor %	Effective filter output kvar	Voltage increase on capacitor V	Recommended min. capacitor voltage V	Capacitor output kvar	Calculated capacitance 3 · µF
Grid voltage: 440 V – 60 Hz detuned filters components selection table					
5.67	25.0	466	480	28	107
5.67	50.0	466	480	56	215
5.67	75.0	466	480	84	323
5.67	100.0	466	480	112	431
7	25.0	473	480	27	106
7	50.0	473	480	55	212
7	75.0	473	480	83	318
7	100.0	473	480	110	424
14	25.0	512	525	30	98
14	50.0	512	525	61	196
14	75.0	512	525	91	294
14	100.0	512	525	122	392
Grid voltage: 480 V – 60 Hz detuned filters components selection table					
5.67	25.0	509	525	28	90
5.67	50.0	509	525	56	181
5.67	75.0	509	525	84	271
5.67	100.0	509	525	112	362
7	25.0	516	525	27	89
7	50.0	516	525	55	178
7	75.0	516	525	83	267
7	100.0	516	525	111	357
14	25.0	558	690	44	82
14	50.0	558	690	88	165
14	75.0	558	690	133	247
14	100.0	558	690	177	330

Reactor inductivity mH	Capacitor ordering code	Reactor ordering code	Contactor ordering code	Cable* cross-section mm²	Fuse** rating A
1.235	1 x B25667B4347A375	B44066D5025S441	B44066S3210J230	16	63
0.618	2 x B25667B4347A375	B44066D5050S441	B44066S6210J230	35	125
0.412	3 x B25667B4347A375	B44066D5075S441	B44066S7410J230	50	200
0.309	4 x B25667B4347A375	B44066D5100S441	–	70	250
1.547	1 x B25667B4347A375	B44066D7025S441	B44066S3210J230	16	63
0.773	2 x B25667B4347A375	B44066D7050S441	B44066S6210J230	35	125
0.516	3 x B25667B4347A375	B44066D7075S441	B44066S7410J230	50	200
0.387	4 x B25667B4347A375	B44066D7100S441	–	70	250
3.346	1 x B25667B5287A375	B44066D1425S441	B44066S3210J230	16	63
1.673	2 x B25667B5287A375	B44066D1450S441	B44066S6210J230	35	125
1.115	3 x B25667B5287A375	B44066D1475S441	B44066S7410J230	50	200
0.836	4 x B25667B5287A375	B44066D1499S441	–	70	250
1.470	1 x B25667A5287A375	B44066D5025S481	B44066S3210J230	16	63
0.735	2 x B25667A5287A375	B44066D5050S481	B44066S6210J230	35	125
0.490	3 x B25667A5287A375	B44066D5075S481	B44066S7410J230	50	200
0.368	4 x B25667A5287A375	B44066D5100S481	–	70	250
1.841	1 x B25667B5287A375	B44066D7025S481	B44066S3210J230	16	63
0.920	2 x B25667B5287A375	B44066D7050S481	B44066S6210J230	35	125
0.614	3 x B25667B5287A375	B44066D7075S481	B44066S7410J230	50	200
0.460	4 x B25667B5287A375	B44066D7100S481	–	70	250
3.982	1 x B25668A6107A375 1 x B25668A6137A375	B44066D1425S481	B44066S3210J230	16	63
1.991	2 x B25668A6107A375 2 x B25668A6137A375	B44066D1450S481	B44066S6210J230	35	125
1.327	3 x B25668A6107A375 3 x B25668A6137A375	B44066D1475S481	B44066S7410J230	50	200
0.995	4 x B25668A6107A375 4 x B25668A6137A375	B44066D1499S481	–	70	250

* Cable cross-section of capacitor bank internal wiring per selected kvar stage, e.g. between fuse-contactor-reactor-total capacitor output. Flexible copper wire to be used
** Fuse size of HRC fuses for short circuit protection of each individual stage of a capacitor bank

Fundamentals of Power Factor Correction

Title / Language	Ordering code
Technical publications	
You can order these publications from your local EPCOS sales office or online at www.epcos.com	
General PFC Product Profile 2006 (English)	EPC:26017-7600
PoleCap PFC Capacitors for Outdoor Applications (English)	EPC:26015-7600
PhaseMod PFC Modules for LV PFC (English)	EPC:26014-7600
Application Note: Damping of Inrush Current (English)	EPC:26008-7600
You can order the following publications via our PFC Marketing Department Tel. +49 89 636 2 10 51 · Fax +49 89 636 2 27 48	
Manual PFC Controller BR6000 (German, English, Spanish)	
Application Note: Dynamic Power Factor Correction (English / German)	
General publications	
Reprint from Components Magazine (English / German) ■ Economical and environmentally friendly ■ Dynamic progress ■ PFC out of the box ■ Power factor correction on site	
Yellow cUL Listening Card for MKK series	
Poster (format DIN A1, h x w = 59.4 x 84.1 cm) ■ PhaseCap Capacitors for PFC ■ PhaseMod Modules for LV PFC ■ BR6000 Controller for PFC ■ TSM-LC Thyristor Switch for Dynamic PFC	
Poster (PDF-File only) ■ PhiCap Capacitors for PFC ■ PoleCap Outdoor Capacitors for PFC	

PFC Hotline:

EPCOS AG
FK PM PFC
Tel. +49 89 636-2 38 17
Fax +49 89 636-2 27 48

EPCOS Worldwide

Europe

Austria, Bulgaria, Romania Serbia & Montenegro
EPCOS CSEE
Siemensstrasse 92
1210 Wien
Tel. +43 51 70 72 56 30
Fax +43 51 70 75 56 30

Belgium, Luxembourg, Netherlands
Siemens N.V.
Agency for EPCOS
Building 23
Charleroisesteenweg 116
1060 Brussel
Tel. +32 3 2 87 39 18
Fax +32 2 5 36 28 57

Czech Republic
EPCOS s.r.o.
Evropská 33a
160 00 Praha 6
Tel. +420 2 33 03 22 81
Fax +420 2 33 03 22 89

Finland
EPCOS Nordic OY
P.O.Box 275
02601 Espoo
Tel. +358 10 5 11 32 00
Fax +358 10 5 11 22 85

France
EPCOS SAS
"Les Borromées"
3, avenue du Stade de France
93210 Saint-Denis La Plaine
Tel. +33 1 49 46 67 89
Fax +33 1 49 46 67 67

Germany, Switzerland
EPCOS AG
Sales Germany, Switzerland
P.O.Box 80 17 09
81617 München
Customer Service:
Tel. (D) 0180 500 33 48
(0,12 Euro/Min.)
(CH) 08 48 37 26 71
Fax +49 89 63 62 80 10

Great Britain, Ireland
EPCOS UK Ltd.
Summit House, London Road
Bracknell, Berkshire
RG12 2AQ
Tel. +44 13 44 38 15 10
Fax +44 13 44 38 15 12

Greece
Siemens A.E.
Artemidos 8
15125 Amaroussio / Athen
Tel. +30 210 68 64 148
Fax +30 210 68 64 562

Hungary
EPCOS Kft. Értékesítési iroda
Sales Office
Lajos utca 48 - 66
1036 Budapest
Tel. +36 1 436 07 27
Fax +36 1 436 07 21

Italy
Siemens S. p. A.
Settore EPCOS
Casella Postale 17154
Viale Piero e Alberto Pirelli, 10
20126 Milano
Tel. +39 02 24 36 42 65
Fax +39 02 24 36 43 80

Poland
Siemens Sp. z.o.o
Components
ul. Zupnicza 11
03-821 Warszawa
Tel. +48 22 8 70 91 51
Fax +48 22 8 70 91 59

Portugal
EPCOS AG
R. Elias Garcia 249 3º B
2700-320 Amadora
Tel. +351 91 75 67 927
Fax +351 21 49 33 476

Russia
OOO Siemens
EPCOS Division
ul. Malaya Kaluzhskaya 19
119071 Moscow
Tel. +7 495 7 37 24 17/18
Fax +7 495 7 37 23 46

Slovakia
EPCOS Sales Representative
Hviezdoslavovo námestie
1688/15
026 01 Dolný Kubín
Tel. +42 1 43 5 82 36 73
Fax +42 1 43 5 82 37 33

Slovenia, Bosnia & Herzegovina, Croatia
EPCOS Sales Representative
Omersova 5
1000 Ljubljana
Tel. +386 1 510 12 91
Fax +386 1 510 12 92

Spain
Siemens S.A.
Division de Componentes
Ronda de Europa, 5
28760 Tres Cantos (Madrid)
Tel. +34 91 5 14 80 00
Fax +34 91 5 14 70 14

Sweden, Denmark, Norway
EPCOS Nordic AB
P.O.Box 46
16493 Kista
Tel. +46 8 4 77 27 00
Fax +46 8 4 77 27 01

Turkey
EPCOS AG Liaison Office
Turkey
Sehit Mehmet Fatih Öngül Sok.
Bagdatlioglu Plaza No:3
Office:4
34742 Kozyatagi Istanbul
Tel. +90 216 4 64 07 55
Fax +90 216 4 64 07 56

Africa

Egypt
Siemens Ltd.
Automation & Drives (A&D)
55, El Nakhil and El Aenab St.
Mohandessin, Cairo
P.O. Box 775, 11511 Cairo
Tel. +202 333 36 69
Fax +202 333 36 07

Republic of South Africa
Electrocomp (PTY) Ltd.
Cnr. Galaxy Avenue &
Electron Street,
Linbro Business Park
Sandton
P.O.Box 1023, Bramley 2018
Tel. +27 11 458 90 00 32
Fax +27 11 458 90 34

Americas

South America
EPCOS do Brasil Ltda.
Av.Ermano Marchetti
1435 - 4 º andar
CEP: 05038-001
São Paulo SP
Tel. +55 11 3817-3425
Fax +55 11 3817-3443

NAFTA
EPCOS, Inc.
186 Wood Avenue South
Iselin, NJ 08830
Tel. +1 732 9 06 43 00
Fax +1 732 6 32 28 30

Asia

Bangladesh
S.A. Traders & Co.
121, Motijheel Commercial Area
Jiban Birma Bhaban (2nd Floor)
Dhaka - 1000
Tel. +880 2 955 8340
Fax +880 2 956 5726

P.R. China
EPCOS (Shanghai) Ltd.
Beijing Office
Room 2203, No. 24A
East Ocean Centre
Jian Guo Men Wai Street
Chao Yang District
Beijing 100004
Tel. +86 10 65 15 78 54
Fax +86 10 65 15 59 19

EPCOS (Shanghai) Ltd.
Shanghai Office
Room 633 - 641, 6/F
Shanghai Central Plaza
No. 381 Huai Hai Zhong Road
Shanghai, 200020
Tel. +86 21 63 91 68 90
Fax +86 21 63 91 68 89

EPCOS (Shanghai) Ltd.
Shenzhen Office
Room 402, 4/F.,
Hantang Building
Overseas Chinese Town,
Shenzen, 518053
Guangdong Province,
Tel. +86 7 55 26 93 57 58
Fax +86 7 55 26 93 57 57

EPCOS Ltd.
Suite 1208-11, 12/F
World Finance Centre
North Tower, Harbour City
Tsim Sha Tsui
Kowloon, Hong Kong
Tel. +85 2 31 01 56 00
Fax +85 2 31 01 56 46

India
EPCOS India Private Ltd.
14/2, Brunton Road
Bangalore 560 025
Tel. +91 80 25 55 96 40
+91 80 25 55 96 50
Fax +91 80 25 55 96 45

EPCOS India Private Ltd.
Sales and Marketing
AC Capacitors
Mehta Estate
Mathuradas Vasanji Road
Chakala - Andheri (East)
Mumbai - 400 093
Maharashtra
Tel. +91-22-26 83 26 51/ 50
Fax +91-22-26 83 26 45

EPCOS India Private Ltd.
Sales & Marketing
AC Capacitors
43, Shantipalli
E.M. ByPass
Rash Behari Connector
Kolkata 700 042
Tel. +91-33-2442 8476
Fax +91-33-2444 9010

Epcos India Private Ltd.
Dr. Gopal Das Bhavan
11th Floor
28, Barakhamba Road
New Delhi 110 001
Tel. + 91-11- 23 70 41 43
+ 91-11- 23 70 41 44
Fax + 91-11-23 70 41 46

Indonesia
PT Industrindo Niagatama
Jl. Sunter Kirana I Blok B3 No.1
Sunter Jaya,
Jakarta 14350
Tel. +6221 65 30 26 58
Fax +6221 65 06 396

PT Omtraco Arya Samanta
Grha Praba Samanta
Jl.Daan Mogot Km. 12
No.9 Cengkareng,
Jakarta 11730
Tel. +62216196199 /
+6221 6 19 69 77
Fax +6221 6 19 34 47 /
+6221 6 19 17 63

Iran
MESBAR Kaveh Co.
No. 57, Apt. 9, Alvand Ave.,
Arjentin SQ
1516963633 Tehran
Tel. +98-21-8888 84 07/ 8
Fax +98-21-8877 06 65

Israel
Nisko Projects
Electronics & Communications
(1999) Ltd.
2a, Habarzel Street
Tel Aviv 69710
Tel. +972 37 65 73 00
Fax +972 37 65 73 33

Japan
EPCOS KK
Shin-Yokohama Square
Building 11F
2-3-12 Shin-Yokohama,
Kohoku-ku
Yokohama, Kanagawa
222-0033
Tel. +81 45 4 78 72 00
Fax +81 45 4 78 72 25

EPCOS KK
Hankyu Terminal Building 9F
1-1-4 Shibata, Kita-ku
Osaka 530-0012
Tel. +81 6 62 92 69 11
Fax +81 6 62 92 69 15

Korea
Siemens Ltd.
EPCOS Division
11th Floor, PMK Bldg.
746 Yeoksam-dong
Gangnam-gu
Seoul 135-080, Korea
Tel. +82 2 34 50 75 81
Fax +82 2 34 50 75 98

Malaysia
Alpha Automation (Selangor)
Sdn. Bhd.
12A, Jalan Pemberita U1/49,
Temasya Industrial Park,
Glenmarie, 40150 Shah Alam,
40150 Selangor
Tel. +60 3 55 69 36 98
Fax +60 3 55 69 40 99 /
+60 3 55 69 32 30

Nepal
Machinery & Electric Complex,
Taha - Galli, Sundhara,
Kathmandu
Tel. +00 977 1 4232544,
4232545, 4242435
Fax +00 977 1 4230573

Pakistan
Siemens Pakistan Eng. Co.Ltd.
Automation & Drives Division
B- 72 Estate Avenue S.I.T.E
Karachi
Tel. +92-21-256 75 72
Fax +92-21-257 77 93

Philippines
GTB Industrial Network Inc.
1150, Pres. Quirino Avenue
Extention
Paco, Manila
Tel. +632 563-8338
+632 563-8339
Fax +632 563-2529

Singapore
EPCOS PTE LTD
166 Kallang Way
Singapore 349249
Tel. +65 68 41 20 11
Fax +65 67 44 69 92

Asia Electric Transformers
Pte Ltd
Blk 4 Kallang Ave
#010-100/104A
Kallang Ave Industrial Centre
Singapore 339421
Tel. +65 6298 8550
Fax +65 62996069

Sri Lanka
K.I.K Group Of Companies
34, S. De. S. Jayasinghe
Mawatha,
Kalubowila, Dehiwala
Tel. +94 11 281 8761
Fax +94 11 282 7129

Taiwan
EPCOS Taiwan Co. Ltd.
4F-1, No.3-1 Yuan Qu Street
Nankang Dist. Taipei 115
Tel. +886 2 26 55 76 76
Fax +886 2 55 59 02 88

Thailand
ITM Capacitors Co. Ltd.
91/10 Moo 4,
Bangna-Trad Road
Bangchalong, Bangplee
Samutprakam 10540
Tel. +66 2 336 11 16
Fax +66 2 336 11 14

United Arab Emirates
Gama Electro-Mechanics
Devices Trdg. Co.(LLC)
P.O.Box 22185
Sharjah UAE
Tel. +971 65 33 54 53
Fax +971 65 33 81 82

Malisco Switchgear Industry
(L.L.C.)
P.O. Box 22624
Sharjah – UAE
Tel. +971 65 32 11 25
Fax +971 65 32 11 05

Australia

Siemens Ltd.
Components Division
Head Office
885 Mountain Highway
Bayswater, VIC 3153
Tel. +61 3 97 21 70 39
Fax +61 3 97 21 72 75

For an up to date overview of our worldwide distribution network please refer to our website at www.epcos.com/sales

Published by EPCOS AG, Corporate Center P.O.B. 80 17 09, 81617 Munich, GERMANY, Tel. +49 89 636-09, Fax +49 89 636-2 26 89 04/06

© EPCOS AG 2006. Reproduction, publication and dissemination of this publication and the information contained therein without EPCOS' prior express consent is prohibited.

Published by EPCOS AG · Corporate Center
Edition 04/2006 · Ordering No. EPC:26017-7600 · Printed in Germany · PS 04065.